SERVICE MANUAL
FOR THE
BBC MICROCOMPUTER

Acorn Computers Ltd., Cambridge, England.

BBC MICROCOMPUTER SERVICE MANUAL

1. Introduction
2. Packaging
3. Technical Specification
4. Modular Assembly
5. Circuit Description
6. Detailed Circuit Operation
7. Selection Link Survey
8. Fault Isolation
9. Progressive Establishment Testing
10. Final Inspection Testing
11. Models A Parts List
12. Expanding A to B
13. Disc and Speech Expansions
14. Service Report
15. Recommended Spares
16. Assembly Drawing
17. Case Upper Assembly Drawing
18. Case Lower Assembly Drawing
19. Circuit Block Diagram
20. Main PCB Circuit Diagram
21. Main PCB Layout
22. Keyboard Circuit Diagram
23. Power Supply Circuit Diagram
24. Power Supply PCB Layout
25. PET Circuit Diagram
26. PET PCB Layout
27. FIT Circuit Diagram
28. FIT PCB Layout
29. FIT Cassette Program Listing

C. B. Turner

issue 2 April 1982

1. INTRODUCTION

1.1. This manual is intended to provide the information required in order to diagnose and repair faults on the BBC Microcomputer which was designed and is manufactured by Acorn Computers Limited of Cambridge, England. The information contained herein is aimed at service engineers and Acorn dealers who will be servicing the BBC Microcomputer. No part of this manual is to be copied or communicated to persons other than those engaged upon service work for or on behalf of Acorn Computers. Any comment or suggestions relating to this manual should be set in writing to the Service Department of Acorn Computers. This manual will be subject to change from time to time and no responsibility can be accepted for any errors and/or omissions.

1.2. The BBC Microcomputer is currently marketed in two versions; Model A and Model B. These are described in this manual together with some preliminary information on the floppy disc and speech system interfaces which may be added to them. Also provided for on the Microcomputer's printed circuit board is a local area broadcast network interface known as the Econet.

1.3. Acorn and the BBC may at any time enhance the specification of the Microcomputer and this may involve changes to the design, especially the printed circuit board. At the time of writing, the printed circuit board in manufacturing stands at issue 3 with approximately 5,000 issue 2 and 1,000 issue 1 circuit boards having been used previously. Information on any changes will be issued by the Service Department at Acorn in response to specific written enquiries.

1.4. Finally, this manual includes information on the Progressive Establishment Test and the Final Inspection Test equipment and associated software which may be used to diagnose and test the BBC Microcomputer. These units are available for sale from Acorn and their service organisations.

2. PACKAGING AND INSTALLATION

2.1. The BBC Microcomputer is supplied in a two part moulded polystyrene packing which is further packaged within a cardboard sleeve. With the Microcomputer a User's Manual, a Welcome Cassette package and a UHF TV lead will also be supplied. The packaging should be kept in tact in case it becomes necessary to transport the unit in the future.

2.2. Warning: The Microcomputer must be earthed.

2.3. Mains supply for UK models: 240v AC, 50Hz.

2.4. A moulded 13 amp 3 pin plug may be supplied; if this is unsuitable for the socket outlet available the plug should be cut off and the appropriate plug fitted instead. The plug thus cut off should be disposed of.

2.5. The wires in the mains lead are coloured in accordance with the following code:-

Blue - Neutral
Brown - Live
Green/Yellow - Earth

As the colours of the wires in the mains lead may not correspond with the coloured markings identifying the terminals in the plug, proceed as follows:-

The wire which is coloured BROWN must be connected to the terminal marked with the letter 'L' or coloured BROWN or RED. The wire which is coloured BLUE must be connected to the terminal marked with the letter 'N' or coloured BLUE or BLACK. The wire which is coloured GREEN/YELLOW must be connected to the terminal marked with the letter 'E' or coloured GREEN or GREEN/YELLOW.

2.6. A mains power switch is located at the rear of the computer.

2.7. When using a flat pin 13A plug it is recommended that a 3 amp fuse (coloured red) is fitted.

2.8. Do not use the Microcomputer in conditions of extreme heat, cold, humidity or dust or in places subject to vibration. Do not block ventilation under or behind the computer. Ensure that no foreign objects are inserted through any openings in the Microcomputer.

3. SPECIFICATION

3.1. Model A BBC Microcomputer System

A fast, powerful self-contained computer system generating high resolution colour graphics and capable of synthesising 3 part music. The computer is contained in a rigid injection moulded thermoplastic case. The following are contained within the computer thus ensuring the minimum of connecting wires.

* 73 key full travel QWERTY keyboard with 10 user definable function keys. The keyboard has two key rollover and auto repeat.
* Internal 240/115V power supply is fully encased and made to BS Class 1.
* The internal loudspeaker is driven from a 3-voice music synthesis circuit with full ADSR envelope control.
* A fully modulated PAL colour television signal, for connection to a normal domestic television aerial socket, is available through a phono connector.
* A BNC connector supplies a composite video output to drive a black and white or PAL colour monitor.
* A standard audio cassette recorder can be used to record computer programs at 300 or 1200 baud using the CUTS standard tones. The cassette recorder is under full automatic motor control and is connected to the computer via a 7 pin DIN connector.
* An interrupt driven elapsed time clock enables real time control and timing of user responses.
* The unit uses a 2 MHz 6502 and includes 16K of Random Access Memory.
* A 16K Read Only Memory (ROM) integrated circuit contains an extensive and powerful Machine Operating System designed to interface easily to high level languages.
* A further 16K 'Language ROM' contains an extremely powerful and fast BASIC interpreter. The interpreter includes

a 6502 assembler which enables BASIC statements to be freely mixed with 6502 assembly language.

* Up to four 16K Language ROMs may be plugged into the machine at any time. These four ROMs are 'paged' and may include Pascal Word Processing computer aided design software, Disk and Econet routines or Teletext acquisition software.
* The standard television output is 625 line 50 Hz, interlaced, fully encoded PAL, modulated on UHF channel 36. Other standards are available.
* The full-colour Teletext display of 40 characters by 25 lines has full character rounding with double height, flashing, coloured background and text - all to the Teletext standard.
* The non Teletext display modes provide user definable characters in addition to the standard upper and lower case alpha-numeric font. In these modes, graphics may be freely mixed with text. Text characters can be positioned not only on, for example, a 40 x 32 grid, but at any intermediate position.
* Separate or overlapping text and graphic windows can be easily user-defined over any area of the display. Each of these windows may be filled and scrolled separately.
* The Model A is able to support the following modes:-
  4 320 x 256 2 colour graphics and 40 x 32 text
  5 160 x 256 4 colour graphics and 20 x 32 text
  6 40 x 25 2 colour text
  7 40 x 25 Teletext display
* All graphic access is 'transparent' resulting in a fast snow-free display.
* Extensive support is provided in the Machine Operating System for the graphics facilities, and this is fully reflected in the BASIC interpreter. These facilities

include the ability to rapidly draw lines and to fill large areas of colour. In addition, very rapid changes of areas of colour can be effected.

* The Model A BBC Microcomputer System can be expanded at any time to the Model B System. In addition, or as an alternative, other facilities such as the Econet, may be fitted within the computer systems.

3.2. Model B BBC Microcomputer System

The Model B BBC Microcomputer System is an enhanced version of the Model A Microcomputer but with the following differences:-

* 32K Random Access Memory (RAM). This enables all the graphics modes to be used.

0	640 x 256 2 colour graphics and 80 x 32 text	(20K)
1	320 x 256 4 colour graphics and 40 x 32 text	(20K)
2	160 x 256 16 colour graphics and 20 x 32 text	(20K)
3	80 x 25 2 colour text	(16K)
4	320 x 256 2 colour graphics and 40 x 32 text	(10K)
5	160 x 256 4 colour graphics and 20 x 32 text	(10K)
6	40 x 25 2 colour text	(8K)
7	40 x 25 Teletext display	(1K)

* The installed RAM is divided between the high resolution graphics display, the user's program and Machine Operating System variables. The Machine Operating System requires about 3½K of RAM in the Model A. If higher resolutions are required with large programmes then the second processor option may be fitted.
* Serial interface to RS423 standard. The new standard has been designed to be inter-operable with RS232C equipment but offers a considerably enhanced specification - for example in maximum length of cable and maximum data transfer rates. Baud rates are software selectable between 75 baud and 9600 baud. The interface provides

not only two-way data transfer, but also two way hand-shaking using RTS and CTS lines. Connection to the machine is made via a 5 way 'diamond' DIN connector and various interconnecting plugs are available for the various standard 25 way D type circuits.

* An 8 bit 'Centronics type' parallel printer port is provided with 'Strobe' and 'Acknowledge' lines.
* An 8 bit input/output port is also provided.
* 4 12 bit analogue input channels are provided. Each channel has an input voltage range of 0-2.5V and the internal converter provides a number in the range 0 to 4095. The conversion time for each channel is 10 milliseconds and when the conversion is complete, the processor is interrupted and the value stored in a memory location for later access. These analogue inputs can be used not only in laboratory control situations, but also as inputs for games-paddles or joysticks.
* A 1 MHz buffered extension bus is provided for connection to PRESTEL, Teletext or various other expansion units.
* All interface sockets to external peripherals, are fitted to the Model B. These include R/G/B/Sync for colour monitors, Econet, serial interface, parallel printer, disk and tube. Having the interface sockets fitted enables the internal expansions mentioned above to be fitted without further soldering.

3.3. Expansion

Both Model A and Model B may have the following expansion options fitted internally at purchase, or by the Dealers at a later date.

* Floppy disk interface
* Econet network interface (separate lealfet available)
* Voice synthesis circuits
* Cartridge ROM pack interface
* Various alternative high-level languages in ROM

External options which plug directly into the machine include:-

* Paddles
* Cassette Recorder
* Black and White and colour monitors and televisions
* 5¼" single-sided disk drive (100K)
* 5¼" dual double-sided double track density disk drives (800K)
* 80 column dot-matrix printer
* Daisy Wheel Printer
* Teletext acquisition unit)
* Prestel acquisition unit)

both of these enable Tele-software to be downloaded into the BBC Computer as well as providing access to the normal Teletext/ Prestel services. Pages may be 'grabbed' and stored for later use.

* 3 MHz 6502 second processor with 60K of RAM
* Z80 second processor with 60K of RAM and a fully CP/M-compatible operating system.

3.4. Software

Considerable attention has been paid to the overall design of the system and application software. A modular approach has been adopted specifically to ease the interfacing of various high-level languages (such as BASIC and Pascal) to the operating system.

Machine Operating System

A 16K ROM is used for the MOS. This software controls all input/output devices using a well defined interface. The MOS supports the following interrupts:-

* Event Timer (used as elapsed time clock)
* 4 channel analogue to digital converter
* Vertical sync
* Keyboard and keyboard buffer
* Tube byte transfer
* Music tone generation and buffer
* Serial interface, input and output, and buffers
* Parallel input/output port

and 'hooks' are provided to support other devices such as:-

* Teletext
* Prestel
* Econet file system
* Disk file system

Many of the operating system calls are vectored to enable the user to change them if required at a future date.

BASIC

The BASIC interpreter is an extremely fast implementation, very close to the Microsoft standard but with numerous powerful extensions:-

* Long variable names
* Integer, floating point and string variables
* Multi-dimension integer, floating point and string arrays

* Extensive support for string handling
* IF ... THEN ... ELSE
* REPEAT ... UNTIL
* Multi-line integer, floating point and string functions
* Procedures
* Local variables
* Full recursion on all functions and procedures
* Effective error trapping and handling
* Cassette loading and saving of programs and data
* Full support for the extensive colour graphics facilities
* Easy control of the built-in music generation circuits
* Built-in 6502 mnemonic assembler enabling BASIC and assembler to be mixed, or pure assembly language programs to be produced.

4. MODULAR ASSEMBLY

4.1. In order to service the Microcomputer, first switch off and disconnect it from the supply, also disconnect any other connecting cables.

4.2. The lid of the Microcomputer case may be removed after undoing four fixing screws, two on the rear panel and two underneath. When reassembling, press the lid down at the rear whilst tightening the two rear fixing screws. Take care not to loose the two spire clips pushed on to the case lid into which the rear fixing screws locate.

4.3. Inside the Microcomputer are three main sub-assemblies: power supply unit, keyboard and the main printed circuit board.

4.4. To remove the keyboard undo the two screws and nuts holding it to the case bottom, take care to note the positions of the associated washers. Unplug the 17 way keyboard connector and the 2-way loudspeaker connector from the main printed circuit board.

4.5. The power supply unit is connected to the main circuit board by seven push on connectors which may be unplugged. Three screws on the underside of the case are undone allowing the unit to be removed. On reassembly, ensure that the same type of screw is used.

4.6. The main printed circuit board can be removed after the two wires to SK2 (composite video BNC socket) have been disconnected. Undo the four fixing screws and remove the circuit board from the case by sliding it forward and then lifting it from the rear.

5. CIRCUIT DESCRIPTION

5.1. This section should be read in conjunction with the block diagram and, if necessary, the circuit diagram at the rear of this manual.

5.2. The Microprocessor used in the BBC Microcomputer is a 6502A running at either 1 or 2 MHz. Most processing is done at 2 MHz, including accesses to the Random Access Memory and Read Only Memory. The processor slows down to 1 MHz when addressing slow devices such as the 1 MHz Extension Bus, the Analogue to Digital Convertor, and the Versatile Interface. A 16 MHz crystal oscillator is used to provide clock signals for the Microprocessor in conjunction with divider circuitry on the video processor ULA (IC 6) which produces 8, 4, 2 and 1 MHz signals.

5.3. Random Access Memory on the Microcomputer is provided by either 8 or 16 dynamic memory devices (ICs 53-68). Row address strobe and column address strobe signals for these RAMs are generated from the 8, 4 and 2 MHz clock signals. These RAMs are cycled constantly at 4 MHz. Two devices may have control of the RAM address lines, one is the 6502 Microprocessor and the other is the 6845 cathode ray tube controller chip (IC 2). The CRTC generates the raster scan signals for the video display, together with the address for each memory mapped byte of information in the RAMs which is required to refresh the display. Six octal buffers, type 81LS95 (ICs 8-13) are used to switch control of the RAM address lines between the Microprocessor and the CRTC. The 6502 Microprocessor is particularly suitable for this kind of application, because

it runs from a contant clock, ϕ 2, and so its requirements for memory access are predictable. Every 250 nanoseconds control of the RAM address lines is switched between the Microprocessor and the CRTC. Thus, in a one microsecond period, the Microprocessor has two RAM accesses and the CRTC has two RAM accesses. Because the CRTC generates a sequence of addresses in order to refresh the display, the row address lines of the RAMs are constantly cycled. Careful design of the addressing methods in each screen mode ensures that the dynamic RAMs are also refreshed by virtue of the sequential CRTC accesses.

5.4. Using this technique, two bytes of information are available per microsecond for refreshing the raster scanned video display. With each horizontal line having a period of 64 microseconds, a 40 microseconds active display area is usual. Thus, 640 bits of information per horizontal line are produced from the memory mapped display. The video processor device (IC 8) is a custom uncommitted logic array developed especially for use in this Microcomputer. At the end of each CRTC 250 nanosecond access period, it latches the byte from the RAM and, according to the display mode in operation, serialises the byte into 1 bit stream of 8 bits or 2 bit streams of 4 bits etc. In this way, display modes varying from 640 pixels in 2 colours to 160 pixels in 8 colours, which may or may not be flashing, can be produced. Also, in the video processor is a high speed piece of static Random Access Memory called a palette. This memory can be programmed to define the relationship between the logical colour produced by the RAM and the physical colour which will appear on the display. Thus, in a 640 pixel mode, the

two colours to appear on the display need not be black and white, they may be, say, red and blue, Note that the information in the RAM is unchanged by the palette; it is its interpretation into physical colours which changes. Modes 0 through 6 in the Microcomputer use software generated characters, that is to say, the character font to be produced on the screen is held in the memory mapped display area of the RAM and graphics or characters may be held. This method of producing characters is expensive in memory, involving a minimum of 8 kilobytes for the display memory. Display mode 7 is a Teletext mode and to implement this an SAA 5050 (IC 5) Teletext character generator Read Only Memory is used. IC 15 latches the information coming from the RAM prior to the SAA 5050. When using this mode, only 1K of RAM is devoted to the display memory and the characters are held within it as ASCII bytes. The SAA 5050 then translates these bytes into a standard Teletext/Prestel format display.

5.5. The red, green and blue logic signals produced by the video processor are buffered by transistors Q4, 5 and 6 and fed out together with a composite sync signal to the RGB connector (SK 3). This output is suitable for feeding straight to the gun drives of RGB monitors. The red, green and blue lines are summed together by binary weighted resistors to feed Q7 which produces a 1v composite video signal suitable for feeding to monochrome monitors, on which the different colours will appear as different shades of grey. Also available from the main printed circuit board, is a UHF TV signal on channel 36, suitable for feeding to the aerial input of a domestic television. This output is modulated by an Astec modulator. Colour is provided for the domestic

televisions by a PAL (phase alternating line) encoder circuit which modulates the colour information on to the colour subcarrier frequency. Q10 is a 17.73 MHz oscillator circuit which is divided by a ring counter (IC 46) giving 2 outputs at the colour subcarrier frequency of 4.43361875 MHz. One of these two outputs is switched by the horizontal line frequency in order to produce the alternate phase on each TV line. Thus, on IC 46, pin 9, we have the 'U' signal and on IC 48, pin 11, the '$\pm$ V' signal. A row of exclusive OR gates is used to select different phases of the 'U' and 'V' signals according to whether a red, green, blue, cyan, magenta, yellow or white colour is to be produced. These signals then drive resistors via a row of AND gates in order to produce the colour subcarrier signal which is added to the monochrome output from Q8 by the buffer Q9. In order for the receiving television to interpret the colour information, a reference colour burst has to be provided at the beginning of each line. A short burst gate signal immediately after the horizontal sync pulse for each line is produced at Pin 4 or IC 41, and it is timed by C45 and R109. This burst gate allows through a standard colour subcarrier signal which the television uses as its reference for the rest of that line. The PAL signal may be added to the 1v video connector with the addition of a 470 pF capacitor between the emitter of Q9 and the base of Q7. Diodes D20, 21 and 22 increase the luminance of the darker colours, e.g. blue, in order to make coloured text displays more readable.

5.6. 31 kilobytes of Read Only Memory are catered for in the Microcomputer address map. 15 kilobytes of this are contained in the operating system Read Only Memory (IC 51). This is, in fact, a 16K device but 1K of it is left unused and it is in this area that the I-O device memory map is

situated. Four other Read Only Memories (ICs 52, 88, 100 and 101) are on the main circuit board. Considerable flexibility is offered by these ROMs. They may all be 16 kilobyte devices, in which case any one of them may be switched into the 16 kilobyte space in the memory map by writing to the ROM select latch (IC 76). Alternatively, four 4 kilobyte ROMs may be in these four sockets in order to fill the 16 kilobytes spaces assigned. In this case, a two line to four line decoder (half of IC 20) is used to select which of the four devices is being addressed by the address lines A12 and A13. Mixtures of these two cases are allowed for, for instance two pairs of 8 kilobyte ROMs, one pair or the other being selected by the ROM select latch and then the ROM to be used in each pair being selected by the 2-4 line address decoder. Normally, IC52 will contain the resident BASIC interpreter and ICs 88, 100 and 101 will contain either other languages such as Pascal, or extra system software such as a Disc Filing System. Address decoding for the ROMs is by IC21 which decodes memory addresses 8,000 to C,000 and C,000 to FFFF (hex). Locations from 0 - 7FFF (hex) are assigned to the dynamic RAM and this is decoded by feeding A15 into pin 4 of IC21. All the rest of the hardware is located within locations F,000 to FBFF (hex). This is decoded by IC22 and via ICs 20 and 25, the Read Only Memory is then masked off over this range of addresses. ICs 24 and 26 decode the individual devices in this range, some of which are read or write only. IC 23 detects when a slow 1 MHz device is being addressed and it calls for the 6502 to do a slow clock cycle.

5.7. Note that in early versions of the BBC Microcomputer,

the operating system is contained within 4 EPROMs in IC positions 52, 88, 100 and 101 with the BASIC interpreter being located in IC 51. This arrangement is abnormal and it will be phased out. Users wishing to expand their systems support ROMs will have to have their original operating system EPROMs exchanged for an operating system ROM which should then be put in the usual position. Refer to the survey of the select options for more detailed information on this.

5.8. One 6522 VIA device (IC 9) is devoted to internal system operation. Port B drives an addressable latch which is used to provide read and write strobe signals for the speech interface, the keyboard and the sound generator chip. Also, coming from this latch (IC 32) are control lines C0 and C1 which indicate the amount of RAM devoted to the display memory to be 16K, 8K, 10K or 20K. Pins 6 and 7 of the addressable latch drive the capitals' lock and shift lock LEDs on the keyboard. The rest of Port B on the internal system VIA is used to input the two 'fire button' signals from the analogue to digital convertor interface and two response lines from the speech interface. Each time the system VIA is written to any changes on Port B which should affect the addressable latch are strobed into the latch by a flip flop which is triggered from the 1 MHz clock signal. Port A of the system VIA (IC 9) is a slow data bus which connects to the keyboard, the speech system chip and the sound generator.

5.9. The speech system device used is a TMS 5220 (IC 99) which, on instructions from the Microprocessor, will either produce at its audio output 'canned' speech from its associated memory (IC 98) or speech data can be fed to it directly from the Microcomputer's memory. IC 18 is a four channel sound generator chip which may be programmed to give varying frequency and varying attentuation on

each channel. The audio output of the speech system device is filtered such that it has a cut off frequency of 7 KHz. This is added to an amplified and level shifted signal from the sound generator by a virtual earth amplifier to which is also added an extra analogue input from the 1 MHz extension bus. This summated audio signal is then finally filtered and all of these operations are done by a quad operational amplifier (IC 17). IC 19 provides audio power amplification to drive a speaker from PL15611. Two forms of serial interface are provided, one is an audio cassette at either 300 or 1200 baud and the other is RS423, over a whole range of baud rates. (RS423 is electrically compatable with RS232C in most applications.)

A 6850 asynchronous communications interface adaptor (IC 4) is used to buffer and serialise or deserialise the data. A second ULA specifically designed for the BBC Microcomputer is also used in the serial interface, (IC 7). Contained within this ULA is a programmable baud rate generator, a cassette data/clock separator and switching to select either RS423 or cassette operations. IC 42 divides the main board 16 MHz clock by 13 and this signal is divided further within the serial interface ULA to produce the 1200 Hz cassette signal. Automatic motor control of an audio cassette recorder is achieved by a small relay driven by a transistor from the serial interface ULA. The signal out of the cassette is buffered and the incoming signal is suitably filtered and shaped by a three stage amplifier. This is a quad operational amplifier (IC 35). The RS423 data in and out signals and request to send and clear to send signals

are interfaced by ICs 74 and 75 which translate between TTL and standard RS423/232 signal levels. Note that this is one of the few sections of circuitry on the Microcomputer which requires an additional -5v supply to be present.

5.10. A four channel analogue to digital convertor facility is provided by IC 73. This device connects straight to the Microcomputer's data bus and it is a dual slope convertor with its voltage reference being provided by the three diodes, D6, D7 and D8.

5.11. ICs 89 to 96 are concerned with the Econet interface and none of the devices in this area are fitted to Microcomputers currently in production.

5.12. IC 89 is an Advanced Data Link Controller Circuit, type 6854 which handles the Econet protocol. Data to be transmitted on to the network is fed from the ADLC to the line drive circuit, IC 93, via an inverting gate section on IC 91. Transmit data then goes through the line driver circuit which produces a differential signal drive to the Econet cables. Received data is detected and converted to a logic signal by one half of IC 94 which is a dual comparator circuit type LM319. The received data is then fed back to the data link controller circuit. An Econet installation has a single master clock station which provides the clock for the whole of the network. This clock signal is transmitted around the network as a second differential line signal and it is used to clock the data in and out of the data link controller circuits. The network clock is also detected using one half of a LM319 comparator circuit, and the detector clock is then fed to both receive clock and transmit clock inputs on the 6854. In the presence of a network clock, the

monostable circuit, IC 87, is permanently triggered and this provides a data carrier detect signal for the data link controller chip. Once the network clock is removed, the monostable immediately drops out and the data carrier is no longer detected. The Econet is a broadcast network system on which a number of stations may attempt to transmit their data over the network at any given time. In this case, a situation called a collision can occur and then the transmitting stations should detect the collision and back off before attempting to try again to transmit over the network.. Collision arbitration software is included in the Econet system. Collisions on the network data lines result in the differential signal on the two data wires being reduced and this condition is detected by IC95 which is another dual comparator circuit. When there is a good differential data signal on the network one output of IC95 or the other will be low, in which case the output of IC91 Pin 6 will be high, indicating no collision. When there are no collisions on the network, and the network clock is detected by the clock monostable, the data link controller is clear to send data over the network. When there is a collision on the network both outputs of IC95 will go high and the clear to send condition will cease. Note that when the computer is not connected to the network a collision-like situation results, in which case again the data link controller will not get a clear to send condition.

5.13. Each Econet system requires termination at the two extreme ends of the network. Optional termination components are catered for on the Microcomputer printed circuit board. These are:-

R26, R42, R53, R54, R56, C19, C22 and D3.

There is also provision on the board for a network clock source. The 6 MHz signal is divided by two to produce 3 MHz and this drives IC90 which is a counter with decoded outputs. One decoded output of the counter is selected to define the network clock frequency and the counter then counts until this output goes high at which time the counter resets and starts again. The selection of this clock signal depends on the length of the network with the longer networks requiring a slower clock. Further selection divides the given frequency by two or by four producing network clocks in the range 75 KHz to 625 KHz. The other section of IC93 is then used to drive the differential clock around the network, assuming that the computer is enabled to be a clock source by select link 5. Up to 255 stations may be connected to each Econet with each station being identified by a unique station identification number. This station ID is programmed on the links S11 and the ID can then be read by the octal buffer IC96. The data link controller circuit produces interrupts which are fed to the central processor NMI line. These interrupts are enabled every time the station ID is read by one half of the dual D-type IC97. Once in the data link controller interrupt service routine, the DTR output of IC89 goes low in order to remove the interrupt by presetting the D type.

5.14. IC78 is a floppy disc drive controller circuit which is used to interface to one or two single or double sided 5¼ or 8 inch floppy disc drives. Logic signals from the controller to the disc drive are buffered by two open collector driver packages IC79 and 80. The incoming signal from the disc drive is first conditioned by monostable IC87 producing a pulse train with each pulse of fixed width. These pulses are then fed to the data sepa-

ration circuits ICs 81 and 82. This is a digital monostable. IC86 divides the 8 MHz clock signal down to 31.25 KHz. ICs 83, 84 and 85 are then used to detect index pulses coming in from the drive which show that the drive is ready for a read or write operation.

5.15. IC69 is a versatile interface adaptor. Port A is used to provide a centronics standard parallel printer interface, with the octal buffer IC70 being used to buffer the data lines. Port B is left uncommitted and is free for use by the user for input or output purposes.

5.16. The address and data lines, A0 - A7 and D0 - D7, together with some page select lines are available as the 1 MHz extension bus to which various peripheral devices may be connected, e.g. Teletext interface. All accesses to this bus will be at a 1 MHz processor speed. The octal buffer IC71 and the octal transceiver, IC72, are used to interface these signals to the internal data address bus.

5.17. Selected address and data lines are available on the Tube connector which is used to connect second language processors into the system. This only should be used by Acorn designed peripherals.

5.18. A 555 timer circuit (IC 16) provides a reset signal at power up or when the reset key is pressed. Also on the circuit board is a power up reset CR circuit from the +5 volt power supply (C10 and R20 and D1). This provides a signal called Reset A which is fed to IC3. Whilst the 555 timer produces a general reset at power up or when the reset key is pressed, the CR signal Reset A only goes low at power up. By interrogating IC3 on the occurences

of a general reset, the microprocessor can thus discover whether this is a cold start, i.e. power up, or a hot start, i.e. the reset key being pressed when the system has already been in use.

5.19. The keyboard circuit connects via PL13. A 1 MHz clock signal is fed to a 74LS163 binary counter, the outputs of which are decoded by a 7445 decoder driver circuit. These outputs drive along one row of the keyboard matrix and each row is driven in turn. If any key is depressed the 74LS30 gate will produce an output when that row is strobed and this will interrupt the computer on line CA2 of IC3. On this interrupt, the computer will enter the key reading software. In order to discover which key was pressed, the microprocessor loads directly into the 74LS163 the address of each key matrix row allowing it to interrogate each row in turn. Also, the microprocessor loads into a 74LS251 data selector, the address of each specific key on that row, i.e. column addresses. In this way, the microprocessor can interrogate each individual key in turn until it discovers which one was depressed and causing the interrupt. Once read, the keyboard assumes its free running mode.

5.20. The power supply unit produces 5 volts at around 2 amps and -5 volts at around 50 milliamps for use on the main circuit board. Some auxiliary power for accessories may also be available on an external connector. The power supply connects to the main circuit board by seven .110 fast on tabs with the +5 volts being fed to three different points across the main circuit board. These points are all connected together electrically. However, by distributing the power in this way the need for very large copper tracks to distribute power around the board is avoided. Most computers in production will have a switch mode power supply, the circuit diagram for which is given. It is not recommended that attempts should be made to repair

this power supply, instead it should be treated as a module to be exchanged. A small number of early computers may have a linear power supply unit with a conventional mains transformer and regulator circuit. These also should be treated as modules to be exchanged rather than serviced.

6. DETAILED CIRCUIT OPERATION

In this section, certain parts of the circuit will be described and accompanied by waveform diagrams where appropriate.

6.1. Pins 4, 5, 6, and 7 of the video processor (IC6) produce 1, 2, 4 and 8 MHz clocks in phase. A D-type flip flop (half of IC 34) divides the 2 MHz clock signal in order to produce the system 1 MHz clock. A 2 MHz signal of suitable phase is produced at the output of another D-type (half of IC 30) and this is further clocked through the second D-type (half of IC 30), and via an OR gate producing the normal 2 MHz clock input to the microprocessor. Requests for a 1 MHz processor cycle from the address decoding are fed via an inverter (1/6th of IC 33) to the D-type (half of IC 31) which remembers that a 1 MHz cycle has been requested. At the appropriate time, as governed by the 2 MHz clock one of the 2 MHz clock cycles is masked off by the D-type (half of IC 34) and when this happens the D-type that remembered that a request had been made is cleared. Depending on the phase relationship between the 1 and 2 MHz clocks at the time of the request, two cases may be considered in order to draw waveform diagrams of this section of circuit. Both diagrams are drawn below, together with a simple program listing which, when running, will produce them alternately, so that they may be viewed with an oscilloscope.

6.2. 2 to 1 MHz Cycle Stretching

CASE A

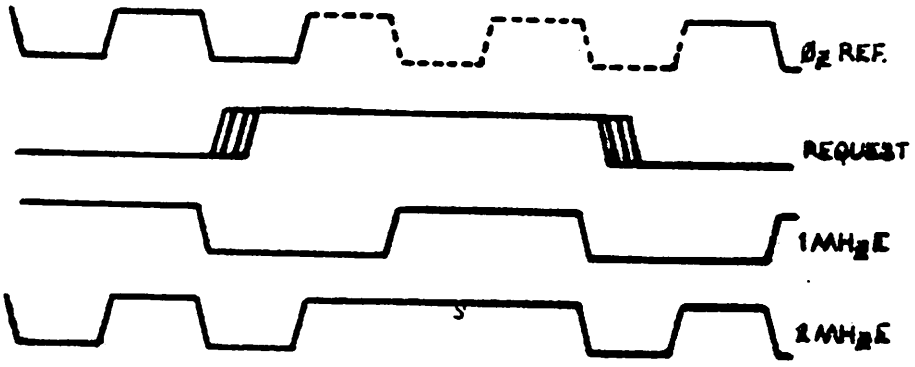

CASE B

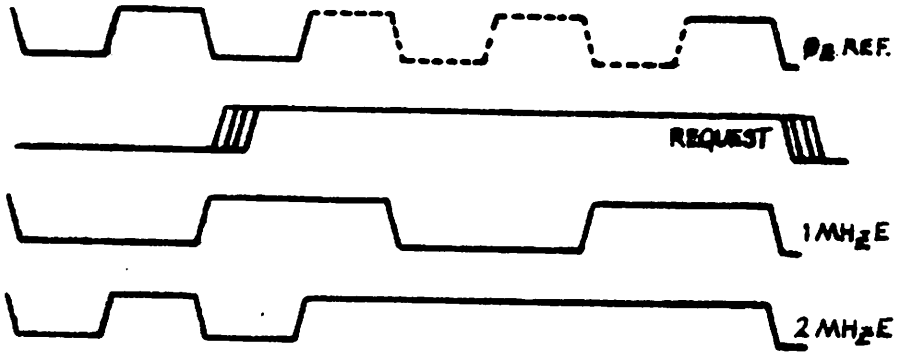

Program to demonstrate both types of stretch:-

```
10  P%=&4000
20  [SEI
30  .start  STA&FE00
40  STA&FE00
50  JMP start:]
60  CALL &4000
```

©ACORN COMPUTER

6.3. A 6 MHz clock signal is required for the Teletext character generator (IC5). This signal is produced by knocking a reset flip flop (two quarters of IC40) backwards and forwards from 8 MHz and 4 MHz clock signals. The resulting flip flop output is then itself inverted according to the state of the 2 MHz clock signal by an exclusive OR gate (¼ of IC38). Glitches on this output are removed by R119 and C48 to produce the 6 MHz clock signal at Pin 8 of IC37.

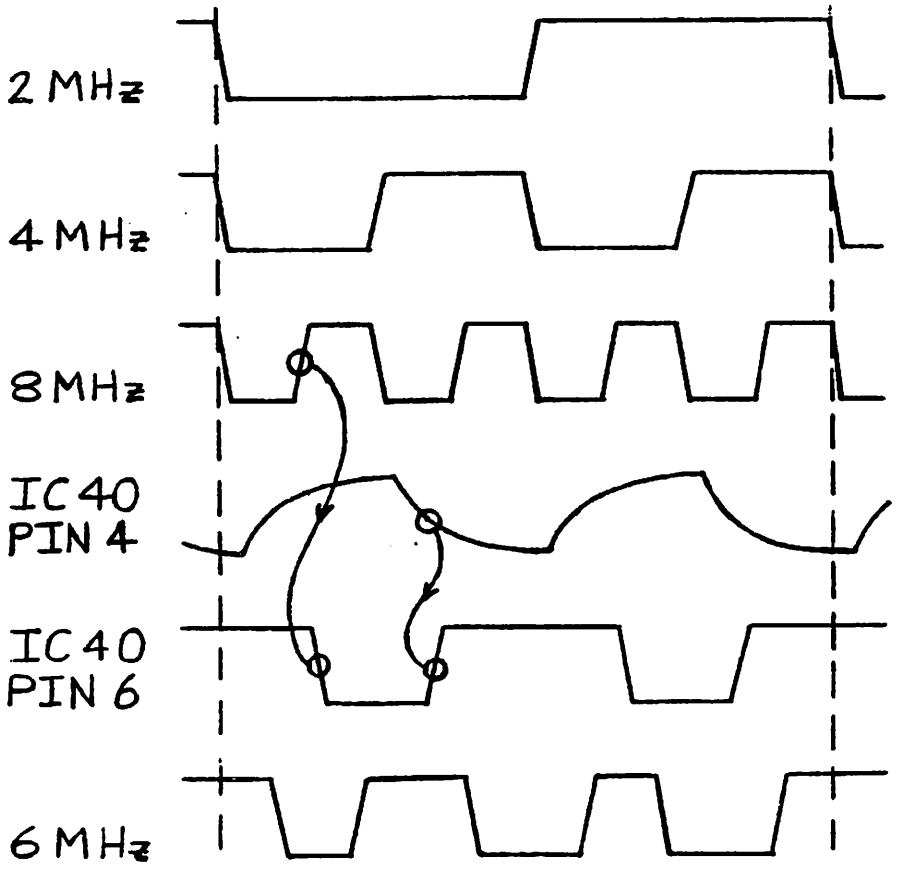

6.4. The dynamic RAMs are constantly cycled by a row address strobe signal which is produced by a D-type connected to the 8 and 4 MHz clock signals (half of IC44). This RAS signal then drives all of the dynamic RAMs via R106. The dynamic RAMs are divided into two banks of 16 kilobytes, that is two banks of 8 RAMs. These banks are input or output enabled by virtue of having their column address strobe available. In Model A computers with only one bank of RAM only CAS 1 is used. 32 kilobyte computers have a second bank of RAMs selected by a 74LS51 circuit (IC28) which controls the 74S139 (half of IC45) producing the CAS signals. The other half of 74S139 (half of IC45) is used to select between the processor and CRT address lines. The following diagram shows these signals together with a large simplified block diagram of the dynamic RAM address and data ports.

DYNAMIC RAM OPERATION

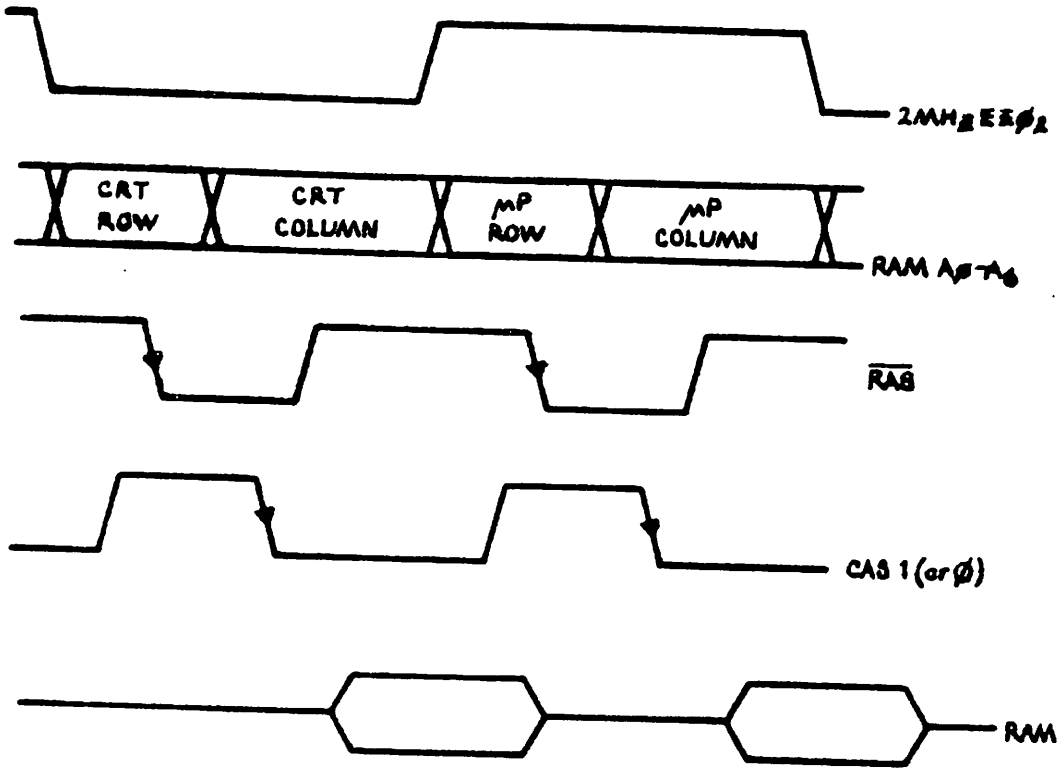

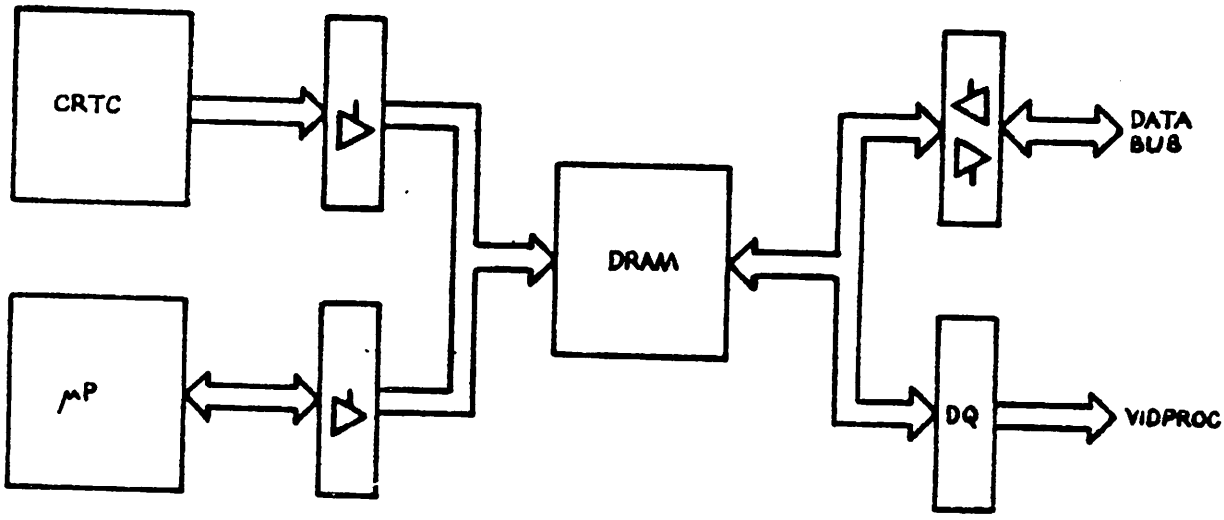

©ACORN COMPUTER

6.5. The video processor uncommitted logic array has been previously described as taking data bytes from the RAM at the rate of 16 bits per microsecond and then serialising them according to the display mode required. The bit streams for serialisation are then fed through a piece of high speed pallette RAM which relates the logical colour from the serialiser to the physical colour to be produced on the display. The pal lette drive is 16 x 4 bits with the 4 bits representing red, green and blue drives, together with a flash bit. The data bus input to the video processor is also used to access the mode control register when the device is chip selected. In the Teletext display mode, RGB information is fed straight into the video processor from the SAA 5050 for the cursor control to be added.

DYNAMIC RAM OPERATION

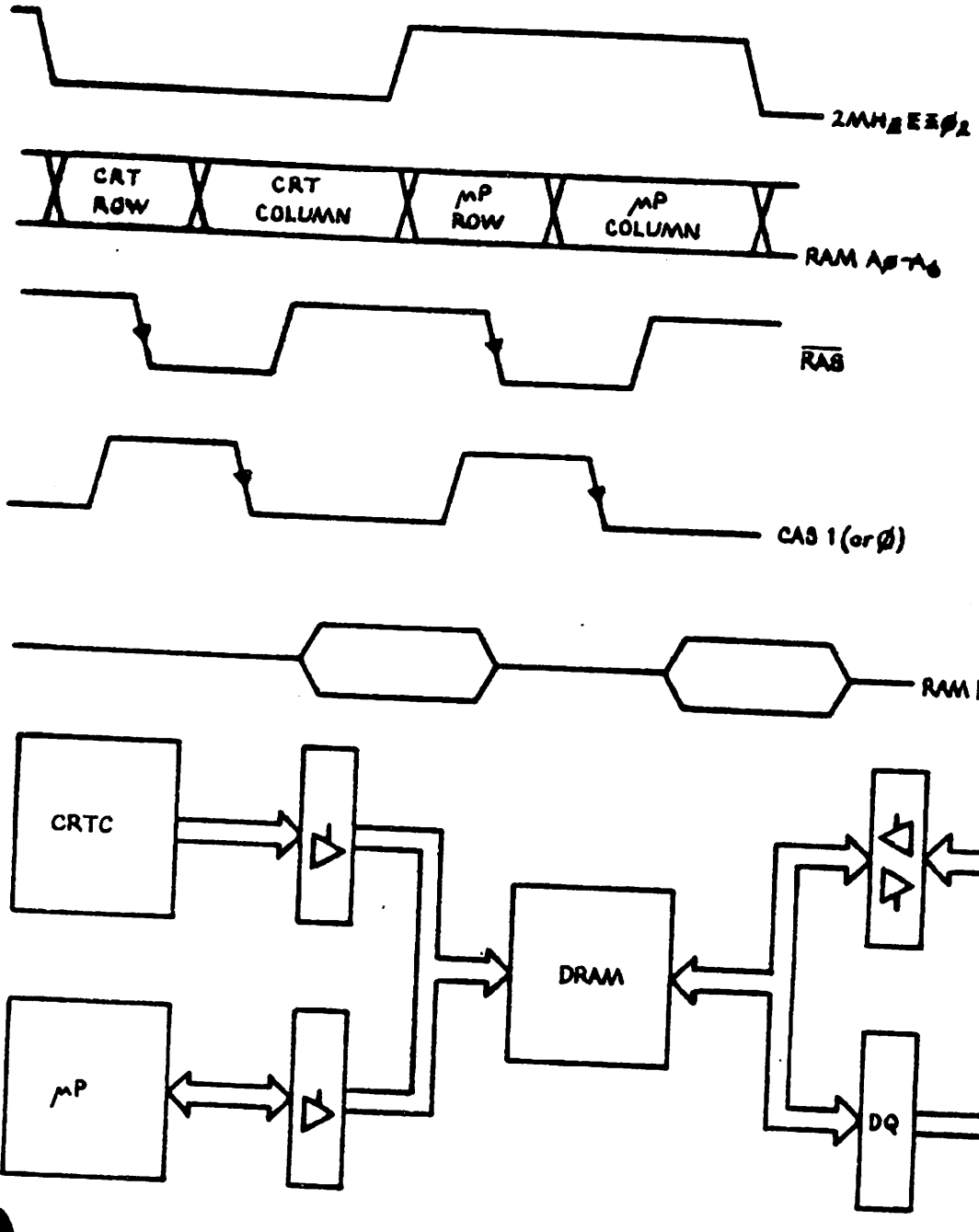

ACORN COMPUTER

6.5. The video processor uncommitted logic array has been previously described as taking data bytes from the RAM at the rate of 16 bits per microsecond and then serialising them according to the display mode required. The bit streams for serialisation are then fed through a piece of high speed pallette RAM which relates the logical colour from the serialiser to the physical colour to be produced on the display. The pal lette drive is 16 x 4 bits with the 4 bits representing red, green and blue drives, together with a flash bit. The data bus input to the video processor is also used to access the mode control register when the device is chip selected. In the Teletext display mode, RGB information is fed straight into the video processor from the SAA 5050 for the cursor control to be added.

6.6. The throughput of the VDU on the Microcomputer is much increased by the use of hardware scroll. There is a register in the CRTC which is used to relate the start of screen address in the screen memory. Thus, in order to scroll the screen, it is only necessary to increment this register by the number of characters per line and then write to the memory address where the last screen data was and where the new screen line data now needs to go. The number of address lines from the CRTC used to address the screen memory has to be sufficient to cater for the biggest screen, which is 20 kilobytes, therefore, sufficient addresses to satisfy 32 kilobytes of screen memory are used and using the hardware scrolling technique the picture rolls around in 32 kilobytes. Consider a scroll of 8 kilobytes in a 20 kilobyte screen. The original start of screen for the 20 kilobyte mode was 3,000 (hex). After an 8 kilobyte scroll, the current start of screen address is 5,000 (hex) with the end of the screen as seen by the CRTC at 5,000 plus 20 kilobytes, that is A,000 (hex). The address A,000 is not physically in the RAM and it is therefore necessary to modify this address in order to move it to the original start of the screen. This is done by adding an address equal to 12 kilobytes to get the required physical address. In this way, the physical memory addresses are kept within the required range. For the different screen modes we need to add different numbers as their start of screen addresses are different. The following table shows this:-

Modes	Screen Size	Start of Screen Address	Number to be added
012	20K	3000	12K
3	16K	4000	16K
45	10K	5800 (or 1800)	22K
6	8K	6000 (or 2000)	24K

The number to be added to the start screen address in order to keep the hardware scrolling within the correct physical memory address range is defined by the control lines C0 and C1 from 74LS5259 (IC32). This number is then computed by some AND gates with the result being added to the higher CRTC refresh address lines by a 74LS5283 adder (IC39)

6.7. Another uncommitted logic array circuit is used for the serial interface. The control register may be set according to the computer data bus when the serial interface ULA is chip selected. This control register specifies a number of frequencies for the transmit clock and received clock used by the 6850 (IC4). Serial interfaces connect to the cassette and RS423 inputs and outputs and via switching, determined by the control register, it connects one or the other of these two with the 6850. A major part of this serial interface is concerned with the cassette circuit where it separates data and clock signals from the raw cassette data and it also synthesises a sine wave to be fed out to the cassette recorder. A block diagram of the serial interface is given.

SERIAL INTERFACE ULA

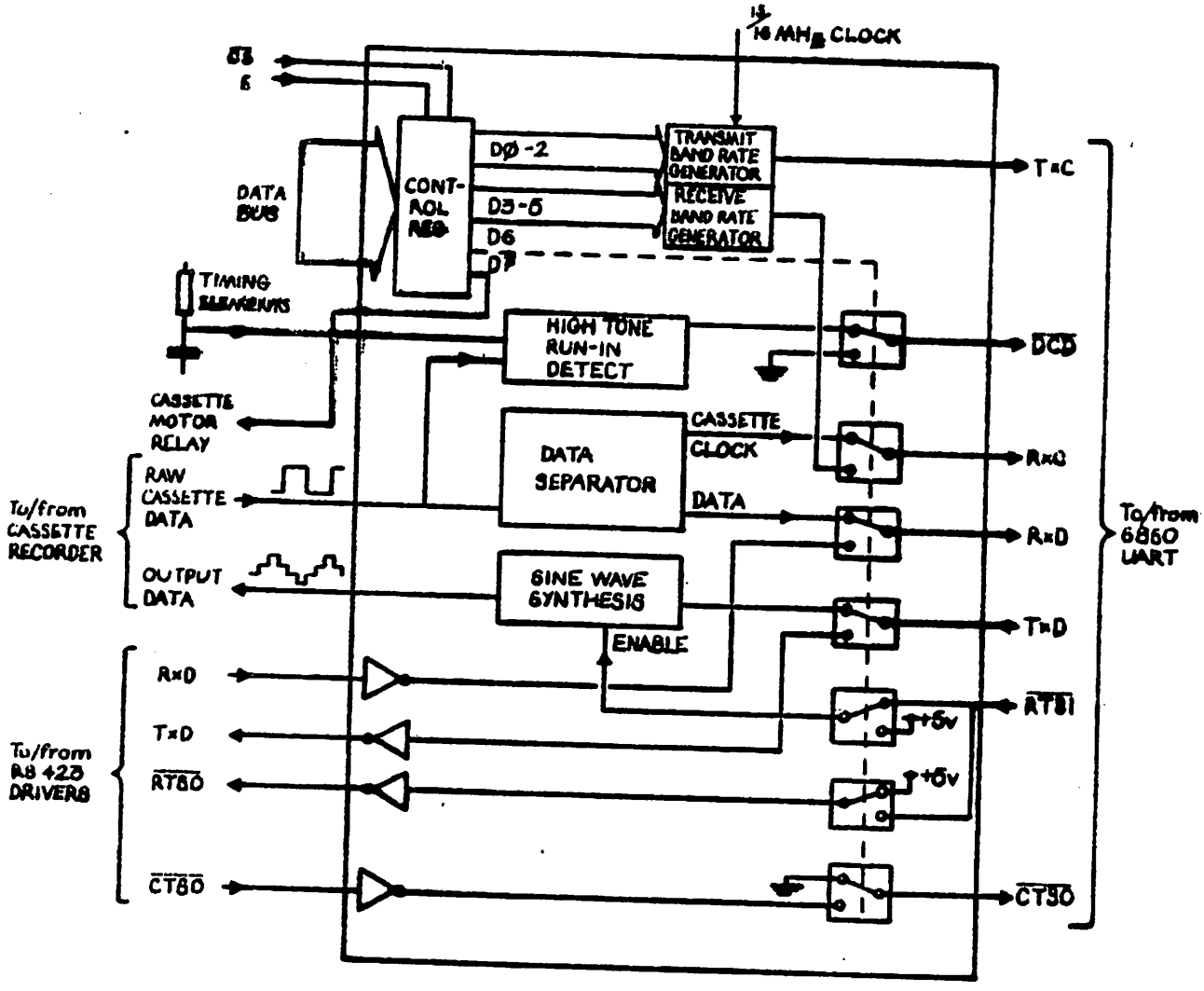

© ACORN COMPUTER

6.8. A memory map of the Microcomputer is given below. Note that the ROM selection latch and the video processor are write only devices and the station ID is a read only device.

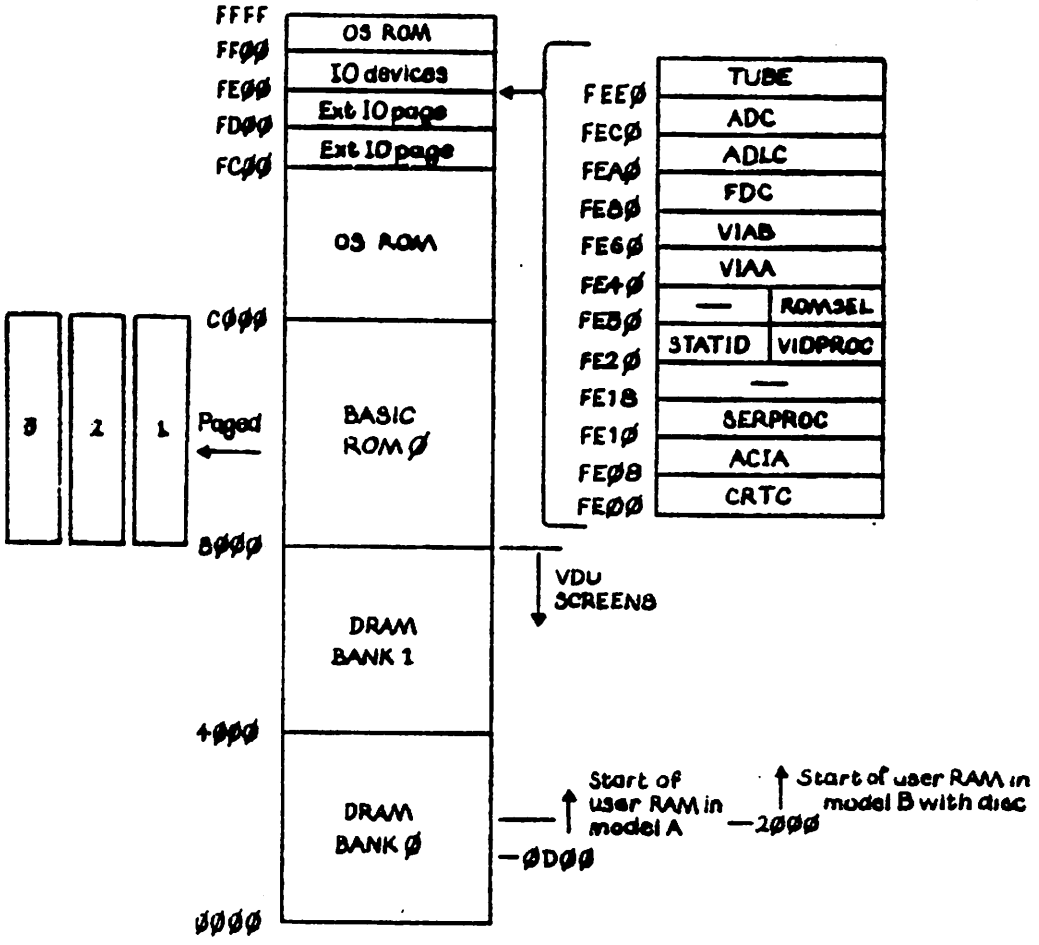

OS. includes VDU drives, cassette filing system, IO drivers etc.

VDU screens, modes 0, 1 & 2 go down to 3000
mode 3 goes down to 4000
modes 4 & 5 go down to 5800
mode 6 goes down to 6000
mode 7 goes down to 7C00

© ACORN COMPUTER

7. SELECTION LINK SURVEY

7.1. Here is a survey of the options which may be selected on the Microcomputer by Select Links S1 to S33. These links may take the form of tracks on the circuit board to be cut, soldered wire links or shorting jumpers plugging on to the rows of pins. Finally, there is a tabular survey of the options selected in production on the Model A and B Microcomputers.

7.2. Option Select Links are as follows:-

1. Used in issue 4 boards onwards only to select printer strobe or direct I/O pin output. Not fitted for issues 1 to 3.

2. OPEN Enable ECONET NMI
   CLOSED Disable ECONET NMI
Do not fit this link with IC91 in place.

3. Clock base frequency selection for ECONET (see circuit diagram).

4. EAST Select 5¼" disc
   WEST Select 8" disc

5. NORTH Enable ECONET clock
   SOUTH Disable ECONET clock

6. NORTH Divide ECONET clock by 2
   SOUTH Divide ECONET clock by 4

7. WEST Applies +5v to pin 30 of disc controller (IC78)
   EAST Applies 0v to pin 30 of disc controller

8. CLOSED Links disc head load signal to PL8.
   OPEN Isolates disc head load signal from PL8

9. CLOSED Disables DISC NMI
   OPEN Enables DISC NMI

Do not fit IC78 with this link closed. Due to PCB fault link must be made between pins 9 and 7 of IC27 for issues 1 and 2. Some issue 3 boards have this link as a track on component side which must be cut when NMI from disc is required.

10. WEST Select 5¼" disc
    EAST Select 8" disc

11. Select Econet station ID (NORTH is LSB)

12. CLOSED Ties ROM select line A to 0V at IC20
    OPEN ROM select line A driven by IC76

Do not fit IC76 with this link closed.

13. CLOSED Ties ROM select line B to 0V at IC20
    OPEN ROM select line B driven by IC76

Do not fit IC76 with this link closed.

14. CLOSED Disables ROM output from page FD, enables JIM
    OPEN Enables ROM output from page FD, disables JIM

If open then link 16 must be closed.

15. CLOSED Disables fast access to page FD via IC23
    OPEN Enables fast access to page FD via IC23

Link 15 must be closed if Link 17 is open.

16. CLOSED Disable fast access to page FC via IC23
OPEN Enable fast access to page FC via IC23
Link 16 must be closed if link 14 is open.

17. CLOSED Disable ROM output from page FC, enable FRED
OPEN Enable ROM output from page FC, disable FRED
If link 17 is open then link 15 must be closed.

18. SOUTH Slow access to IC100 ROM
NORTH Fast access to IC100 ROM

19. WEST Slow access to ROM's IC52, IC88 and IC101
EAST Fast access to ROM's IC52, IC88 and IC101
Diodes D10, D11 and D12 may be selectively removed to speed up ROM's IC101, IC88 and IC52 respectively when link 19 is in WEST position.

20. SOUTH High ROM select bit to IC20 decoder from A13
NORTH High ROM select bit to IC20 decoder from ROMSEL 1

21. 2 x NORTH/SOUTH selects blocks 8 to B in IC51 and blocks C to F in IC's 52, 88, 100 and 101.
2 x EAST/WEST selects blocks C to F in IC51 and blocks 8 to B in IC's 52, 88, 100 and 101.

22. SOUTH Low ROM select bit to IC20 decoder from A12
NORTH Low ROM select bit to IC20 decoder from ROMSEL Ø

23. OPEN RS423 receiver not terminated (DATA)
CLOSED RS423 receiver terminated (DATA)
See interface IC data.

24. OPEN RS423 receiver not terminated (CTS)
CLOSED RS423 receiver terminated (CTS)

25. SOUTH Selects CAS for 16K RAM configuration
NORTH Selects CAS for 32K RAM configuration

26. WEST Selects normal video output
EAST Selects inverted video output

27. WEST Select 8 MHz clock for 5¼" disc
EAST Select 16 MHz clock for 8" disc

28. WEST Select base baud rate from baud rate generator
EAST Select 1300 baud cassette rate
If link 28 is in EAST position RS423 baud rate is also affected.

29. EAST Select base baud rate from baud rate generator
WEST Select 1300 baud cassette rate
If link 28 is in WEST position RS423 baud rate is also affected.

30. For future options to allow two or more ROM select signals to be 'WIRE-OR'ed.

31. WEST Selects +ve CSYNC to RGB video output
EAST Selects -ve CSYNC to RGB video output

32. WEST Selects A13 input to A13 pin of ROM's IC52 and IC88
EAST Selects +5v input to A13 pin of ROM's IC52 and IC88.

33. WEST Selects A13 input to A13 pin of ROM's IC100 and IC101.
EAST Selects +5v input to A13 pin of ROM's IC100 and IC101.

7.3. Options selected in production are:-

No.	Fit Pins	Grid Ref.	Copper Track		Model 'A'	Model 'B'		Memory EPROM	Memory ROM	No.
1		2,108	S							1
2		2,161			X	X				2
3		2,173								3
4		12,12	E							4
5		26,195								5
6		26,205	.							6
7		30,65	W							7
8		32,15	X							8
9		35,128			X	X				9
10		45,15	W							10
11		75,210								11
12		97,70			X					12
13		100,67			X					13
14		101,53	X							14
15		107,97	X							15
16		108,90	X							16
17		108,52	X							17
18	3	110,52						S	N	18
19	3	102,102						W	E	19
20	3	123,55						S	N	20
21	2x2	122,65						2xN/S	2xE/W	21
22	3	127,70						S	N	22
23		177,215								23
24		181,195								24
25	3	215,185			S	N				25
26	3	221,68			W	W				26
27		226,95	W							27
28		237,144	W							28
29		237,146	E							29
30		284,20								30
31	3	270,170			W	W				31
32	3	295,65						E	W	32
33	3	295,67						E	W	33

X = Wire Link N = North S = South E = East W = West

North is side furthest from keyboard when PCB is viewed from the component side.

8. FAULT ISOLATION

8.1. It is difficult to give advice on fault isolation as this is largely a matter of experience and understanding of the computer. However, the following thoughts may be of interest.

8.2. Any description or accompanying note giving details of the fault and how it came about should be read carefully. Always ensure that there really is a fault with the hardware and that it is not the user's program or the user's understanding of the computer which is the problem.

8.3. Always check the power supply voltages actually on the main circuit board as a matter of course. Power supplies are easily prone to failure either because of the heat generated in the case of linear power supplies, or because of the circuit complexity in the case of switched mode power supplies. The computer will continue to operate without the -5 volt supply; however, specific areas of it will not function. These are the cassette interface and the speech and sound systems.

8.4. The next step should be to check that the reset line works and that the master clock signals 1, 2, 4, 6 and 8 MHz are all available. Whilst doing this, examine the board very carefully for signs of physical damage and dry joints, missing components etc.

8.5. If the fault is restricted to a particular input or output function, it should be possible to trace the signals through this circuitry and simple programs may even be written in order to monitor or stimulate signals concerned.

8.6. The worst kind of fault with a microprocessor system is that the processor is unable to fetch instructions from its read only memory, process them and then produce some sort of result which the operator can see or hear. In the case of such faults, the whole system appears completely dead and it is very difficult to locate the specific fault. Indeed, it is probably true that in a microcomputer system over 99% of the circuitry must be working before any indication is given to the operator at all that the system is running. This kind of problem is made worse on this computer because of the technique used to refresh the dynamic RAM. Not only must the processor fetch instructions from read only memory and process them, it must also successfully program the CRTC which, in turn, must begin to produce refreshed addresses for the dynamic RAM before the system memory can operate. It is useful to examine the sync pin on the processor in order to determine whether it is running a program or not, even though, no visual output can be seen on the display. Also, a check for the horizontal and vertical synchronisation signals for the display at CRTC will reveal whether or not this has been successfully programmed at system reset.

8.7. The keyboard is best checked with substitution of a known good unit. If one is not available then check for scanning on the key row lines from 7445 decoder and also look for an interrupt signal if any key is depressed. A logic probe is most useful for this kind of work where very short pulses are made visible on the probe indicators by a pulse stretching circuit.

8.8. As an aid to repair, a progressive establishment tester is available. This unit allows the system to run simple test software although still using the on-board microprocessor.

However, this software is designed as such that it progressively tests and establishes that one section of the circuitry is working at a time before moving on to the next test. This is described elsewhere in this manual.

8.9. Once having located and repaired any faults, computers should always go through a final inspection test before being returned to the user. In the case of Model A computers, this test can take the form of a simple program loaded over the cassette interface which exercises the screen and sound outputs and checks the RAM and ROM. Model B computers have a similar test program but there is also available a final inspection test circuit board which connects via the 1 MHz bus and feeds back to the user port connector, printer connector, RS423 connector and the analogue input connector. Using this board the test program running in the computer can stimulate and monitor each of the input/output systems through the 1 MHz bus. The final inspection test cassette program and the final inspection test circuit board are described elsewhere in this manual.

9. PROGRESSIVE ESTABLISHMENT TESTING

9.1. In order to aid fault diagnosis, repair and machine testing, Acorn will be offering three items from March, 1982. These are a Progressive Establishment Tester, a cassette with a machine testing program on it, and a Final Inspection Tester to go with the cassette. Repair sites should also be equipped with standard test equipment such as oscilloscopes, meters, logic probes etc.

9.2. The Progressive Establishment Tester (PET) is a printed circuit board approximately 6 inches by 8 inches in size. It connects to the machine under test and causes it to be exercised through a number of tests enabling fault diagnosis and repair. Microprocessor engineers will know the problem of being faced with a dead machine and then having to find a fault when all of the machine has to be fault free before any of it can work. This problem is accentuated on the BBC Microcomputer because of its use of a software programmable video display controller IC 6845 CRTC and the use of the address scanning from this device in the refreshing of the Dynamic Random Access Memory. The PET connects via two 40 way DIL IC test clips to the BBC Microcomputer main 6502 microprocessor and Versatile Interface Adaptor IC's, a further connector is plugged on in place of the Microcomputer's ROM select links, enabling the use of the test programs in a ROM on the PET instead. Further connectors on the PET go to the BBC Microcomputer input/output device connectors allowing stimulation and monitoring of the input/output signal lines. The PET requires a 5 volt power supply at 500 milli-Amps and it will normally be used to test the main circuit

board out of the BBC Microcomputer case. The PET circuit board will be of a rugged construction and it will not be cased as it is only intended for use in a service laboratory environment. Some users may like to invent an enclosure for their PET but Acorn will not be doing this.

9.3. When switched on and after reset (which is automatic on the BBC Microcomputer) the PET will first run a very simple looping program in the 6502 on the BBC Microcomputer circuit board. This program will not require the use of RAM or any other devices on the main circuit board and it will just test the address, data and address select lines on the board. An oscilloscope trigger output on the PET will allow easy viewing of any point on the circuit during this loop which will only be around ten instructions long. This is test Ø and this will be indicated by a seven segment display on the PET, the program will continue looping in this way until a green push button on the PET is pressed when the PET will proceed to test 1. Test 1 will exercise and check at the VIA, test 2 the serial interfaces, test 3 the 6845 CRTC, test 4 the DRAM, test 5 the ROM's etc. In this way, the PET can be used to 'progressively establish and test' each section of the machine. For each test a buzzer on the PET will sound in case of a failure and use of a red push button will silence the buzzer and cause the test to be repeated; pressing the green button will always cause the PET to advance to the next test. A total of 16 tests each of which may contain up to 16 sub-tests will be provided and all of the main circuit board functions will be tested. Standard video display monitors will be required for the later tests when the operator must view the display and judge whether or not the test is passed. The PET will have the capability of being expanded to test disc and Econet equipped BBC Microcomputers when these become available.

9.4. Connections to the PET for model A are as follows:-

Connect 40 way clip to UUT 6502A
Connect 40 way clip to UUT 6522
Connect 7 pin DIN plug to cassette port
Connect 2 pin lead to loudspeaker
Connect lead to ROM select pins
Connect PET to 5V
Connect UUT to 5V
Connect 1V composite video output to B/W monitor
Connect UHF output to colour TV

9.5. Connections to the PET for model B are as follows:-

Connect 40 way clip to UUT 6502A
Connect 40 way clip to UUT 6522
Connect 26 way connector to printer port
Connect 20 way connector to user port
Connect 34 way connector to 1 MHz extension bus
Connect 15 way D-type to analogue interface port
Connect 7 pin DIN plug to cassette port
Connect 2 pin lead to loudspeaker
Connect lead to ROM select pins
Connect PET to 5V
Connect UUT to 5V
Connect 1V composite video output to B/W monitor
Connect UHF output to colour TV
Connect RGB output to RGB monitor
Connect RS423 loopback to RS423 port

9.6. Switch on the power and the tests start running automatically, as summarised here:-

0 0 6502A is running start of PET code
1 0 End of system 6522 (IC3) finder : Note 1
1 1 End of IC3 shift register test
1 2 End of IC3 timers test
1 3 End of IC3 timers test
1 4 End of IC3 port A as input test
1 5 End of IC3 port A as output test
1 6 End of IC3 port B as input test
1 7 End of IC3 port B as output test

2 0 Start of cassette and RS423 tests : Note 1
2 1 End of 6850 (IC4) and serial processor (IC7) finder
2 2 End of cassette interface tests
2 3 End of RS423 tests : Note 2
2 4 End of DCD tests

3 0 Start of 6845 (IC2) tests : Note 1
3 1 End of 6845 finder

4 0 Start of zero page RAM tests
4 1 End of zero page RAM tests

5 0 Start of ROM tests
5 1 End of BASIC ROM test
5 2 End of OS ROM test

6 0 Start of RAM tests
6 1 End of model A RAM tests : Note 2
6 2 End of model B RAM tests

7 0 Start of user 6522 (IC69) tests : Note 3
7 1 End of IC7 shift register test
7 2 End of IC7 timers test
7 3 End of IC7 timers test
7 4 End of IC7 port A as input test
7 5 End of IC7 port A as output test
7 6 End of IC7 port B as input test
7 7 End of IC7 port B as output test

8 0 Start of 1 MHz extension bus tests : Note 3
8 1 End of 1 MHz extension bus tests

9 0 Start of analogue interface tests : Note 3
9 1 End of channel one tests
9 2 End of channel two tests
9 3 End of channel three tests
9 4 End of channel four tests

A 0 Reserved for future expansion

B 0 Reserved for future expansion

C 0 Reserved for future expansion

D 0 Reserved for future expansion

E 0 Start of music generator tests
E 1 Test for silence : Note 4
E 2 Test for the four channels : Note 4

F 0 Start of video mode tests
F 1 Test for Mode 7 : Note 4

F F Break handler routine

Note 1: rest of this section skipped if finder fails
Note 2: this test skipped if machine is not a model B
Note 3: this section skipped if machine is not a model B
Note 4: this test requires operator intervention.

9.7. In all sections of test, the section number is put on the left hand LED and a zero in the right. This is so that if the system crashes whilst the test is being run, and hence no

results are displayed, you can tell what it was trying to do when it failed. If a test does fail the test number flashes and the buzzer generates a noise to attract the operator's attention. After noting the failure pressing either button on the PET advances the machine to the next test.

The test 0 0 is the most unusual of all those in the sequence, assuming the processor gets up and running it sits in tight loop of only a few instructions, a 'scope can be triggered off the chip select of IC14 on the PET board; a test point is provided for this purpose. To exit this loop, press either of the buttons of the PET board.

Before entering the first test, the software tries to determine if the board is a model A or a model B. It does this by checking for the presence of the user 6522, the analogue interface and the 1 MHz bus interface. If any of these are present it assumes that the machine is a model B.

The first section of tests is concerned with the system 6522, (IC3). The first thing done with IC3 is two writes and reads to the shift register, which after a reset acts as a byte of RAM. If this fails it is assumed that the chip cannot be seen and the rest of this group of 6522 tests is skipped. The shift register and the timers are tested next, followed by the I/O ports. The lines are connected back to the PET board via a 40 way IC clip and ribbon cable. Obviously, a poor connection in these lines will cause erronious fails.

Section two starts off by doing a software master reset on the 6850 and testing the status register to see if it is visible to the processor. If it is not, the rest of this section is skipped. The serial processor is not looked for as it is a write only device. The cassette interface is tested

for its ability to send and receive by looping back the input to the output. This is possible due to double buffering in the 6850. The RS423 test is only done if the machine is a model B and works in an identical manner to the cassette test. Then the delay in the DCD (data carrier detect) circuit is tested. The DCD flag in the 6850 should change 0.1 to 0.4 seconds after a continuous tone appears at the serial processor input. This timing is important if the machine is to read the WELCOME cassette.

Section three tests for the ability to read and write to the 6845, (IC2) and also sets up the screen in Teletext mode and fills it with characters.

In section four the bottom 1K of RAM is tested, this is the area that the BBC Microcomputer uses very heavily and a fault in this area can cause very strange results as the zero page RAM and the stack are in this 1K. This area is also used by all the later test routines so if it fails eroneous results can be given by them.

Section five tests the CRC (cyclic redundancy check) of the ROM's. This is a very reliable way of testing for ROM contents as unlike a simple check-sum it is not easily fooled by multiple bit failures.

Section six tests all of the RAM within the machine with the exception of the bottom 1K which is used by the program. If the machine is a model A, the tests for the upper 16K block are omitted.

Section seven tests the user 6522 (IC69): as this is only found on model B's, this, and the next two sections, are skipped on model A's. The test is virtually identical to those for IC3, with the exception of port A which is only tested as an output. Connections are made via cables to the headers on the front edge of the board.

Section eight tests the 1 MHz extension bus by using two access RAMs mounted on the PET board.

Section nine tests the four analogue to digital channels.

The remaining sections require operator intervention: after the operator has noted the results of the test, the green button should be pressed to step on to the next test.

Section E tests the sound generator and associated circuitry. When E 1 is displayed the generator should be silent. When the button is pressed, the display will change to E 2 and the generator will generate a descending sweep on each of the channels.

Section F is entered by pressing the green button again. This test fills the screen with vertical colour bars. Pressing the key causes the tests to start again.

10. FINAL INSPECTION TESTING

10.1. The Final Inspection cassette is a 1200 baud recorded program available in model A or model B versions for loading into a completely assembled BBC microcomputer. This program then exercises the computer in all the available screen modes, tests the RAM, ROM, sound and keyboard with the operator interacting by pressing keys on the keyboard. Running this test after leaving the machine on soak for some time will ensure that the quality of the machines returned to customers is satisfactory.

10.2. In the case of model B machines, a Final Inspection Test circuit board will be available. This board will connect via ribbon cables to the 1 MHz bus, printer, user IO, analogue and RS423 connectors on the BBC Microcomputer under test. In conjunction with the model final test program cassette, the test program can exercise and monitor for itself each of the input-output connectors. All connections can be made with the computer fully assembled in its case ready for despatch to the customer. The FIT circuit board will mainly consist of connectors and its circuitry is very simple.

10.3. To use the FIT, connect the Microcomputer (UUT) to a cassette recorder, a composite video monitor and a colour TV and on a model B also connect up the RGB monitor, the FIT board and the RS423 plug. Switch on and check that the computer starts up correctly, i.e. speaker beeps, the centre of the three LEDS lights up and the display shown below occurs.

```
BBC Computer XXK
BASIC
>
```

The 'XXK' should either read 16K, for a model A or 32K for a model B. It might be necessary to choose a different channel

on the TV to get it properly in tune.

Now type in on the UUT:-
CHAIN "" (return)

It should respond with:-
Searching

The left hand LED must light. Within 15 seconds the machine should display:-
Loading
TEST 00

As the program is loaded, the two digits after 'TEST' will increment, and at the final stage will be followed by four more digits, which might be a combination of numbers and the letters A through F.

The programs should take less than 40 seconds to load, so if the computer does not respond with 'Loading' within half a minute it is probably faulty and should be returned for repair.

The program will start running automatically and will print out the results of certain non-visible tests. On the model B the categories will be:-

1 MHz EXTENSION BUS
PRINTER LINES
USER I/O OUTPUT
USER I/O INPUT
A/D CHANNELS
RS423
BASIC ROM CRC
OS ROM CRC

On a model A only the last two categories will appear. On both machines each line will be preceded by 'PASSED' or 'FAILED' and will be red or green respectively. After this it should print in blue:-

CHECK SOUND OK, THEN PRESS SPACE

After checking the results of these tests, wait for the computer to play a tune of five notes followed by a burst of noise; it will repeat these until the operator presses space. The operator should have had these demonstrated on a known good machine before starting testing.

When the coloured bars fill the screen, check that they are correct, i.e. from left to right they are WHITE, RED, GREEN, YELLOW, BLUE, MAGENTA, CYAN, WHITE. A shortened version of the colour name occurs at the top of the screen to ensure that they cannot be forgotten. When satisfied that the colours are correct and that the quality is good press space.

The screen should now be partly filled with ordered characters. Ensure that they are perfectly clear with no sparkle at the right hand side of each and that the cursor is correct and steady. Pressing space will cause the machine to do the same thing on the other modes, 0, 1, 2, 3, 4 and 6 on a model B and just 4 and 6 on a model A. On each screen check for the same thing. If a screen fails, note which mode it is, this information is printed at the top of the screen.

Pressing space again will cause the screen to clear except for the top line, which will say:-

BLACK BACKGROUND

On this and the subsequent seven pages you should check that

the background is the colour specified and that picture and colour quality are good. The next seven colours are RED, GREEN, YELLOW, BLUE, MAGENTA, CYAN and WHITE. Pressing space will cause the next frame to be displayed.

After the white background, there will be a short pause and then the screen will display a map of the keyboard. The only major discrepancy is that the left, right, up and down arrows are replaced with the lower case letters a, b, c and d. Test the keyboard by running the toothbrush over the keys ensuring that you do not press the break key. If any of the keys cannot be removed from the display (except BR of course) then the unit is faulty. Note any keys which do not work and then press break to reset the machine. Then press the 'CAPS LOCK' and 'SHIFT LOCK' keys in turn and check that the relevant LED lights.

dwg no		/P	used on		Sht 1 of 1
-	103,001		BBC COMPUTER CASE LOWER ASSEMBLY 103,004		

30				
29				
28				
27				
26		KEY LOCATING PLATE	1	
25		COM KEY TOPS	1 SET	
24		FUTABA KEYBOARD SWITCH		
23				
22		WIRE	A/R	USE FOR LINKS
21		SLEEVING .75" LENGTH	6	FIT TO LD1-3
20				
19		INTEGRATED CIRCUIT DM 74 45N	1	IC3
18		INTEGRATED CIRCUIT 74 LS 251	1	IC2
17		INTEGRATED CIRCUIT 74 LS 163	1	IC1
16		INTEGRATED CIRCUIT 74 LS 30	1	IC4
15				
14		DIODE IN 4148	9	D1-9
13		L.E.D. RED	3	LD1-3
12				
11		CAPACITOR DISC CERAMIC	3	C2-4
10		CAPACITOR 10µF 16V ELECTROLYTIC	1	C1
9				
8		RESISTOR 470Ω ¼W 10% CARBON	3	R1-3
7		RESISTOR 10KΩ ¼W 10% CARBON	8	R4-11
6				
5	201,021	SPEAKER ASSEMBLY	1	
4		RIBBON CABLE ASSEMBLY (INC. PLUGS)	1	MOLEX 7720-17-2-4
3				
2				
1	203,001	KEYBOARD PCB	1	
ITEM	PART No	DESCRIPTION	QTY	REMARKS

ISS	DATE	BY	CHK
1.	2.82	RA	

KEYBOARD ASSEMBLY

dwg no. 1003,001 /P

© COPYRIGHT 1982
ACORN COMPUTERS LTD
FULBOURN ROAD
CHERRY HINTON
CAMBRIDGE CB1 4JN

ACORN COMPUTERS Ltd

Drg no		used on	Sht
103,002 /P		BBC COMPUTER ALL MODELS	1 of 1

ITEM	PART NO	DESCRIPTION	QTY	REMARKS
20				
19				
18				
17				
16				
15				
14				
13				
12				
11				
10				
9				
8				
7		EVOSTICK 528	A/R	ADHERE ITEM 6 to ITEM 1
6		GAUZE 3" x 2"	1	CUT FROM RS 555-831
5				
4	201,025	CUT RIGID PVC LABEL KEYBOARD	1	
3				
2	201,024	SOFT KEY LABEL MOULDING	1	
1	201,022	CASE UPPER	1	

Title: CASE UPPER ASSEMBLY		
Drg no. 103,002 /P		

© COPYRIGHT 198
ACORN COMPUTERS Ltd
FULBOURN ROAD
CHERRY HINTON
CAMBRIDGE CB1 4JN

ACORN COMPUTERS Ltd

103,004 /P | BBC COMPUTERS, ALL MODELS | Sht 1 of 1

ITEM	PART NO	DESCRIPTION	QTY	REMARKS
30		* Use 1 off Items 22-24 as available		
29		4BA x ½" PAN HD POSIDRIV	2	
28		4BA NUT FULL	2	
27		4BA INTERNAL TOOTH SHAKEPROOF WASHER	2	
26		4BA WASHER PLAIN LARGE	2	
25		POWER SUPPLY UNIT		ADAPTORS & ELIMINATORS
24		POWER SUPPLY UNIT		ASTEC SMPS
23		POWER SUPPLY UNIT		ST. IVES WINDINGS
22	103,003	POWER SUPPLY UNIT	1	GRANTA WINDINGS
21				
20				
19		M3 x 8MM CHEESE HEAD POSIDRIV	3	USE WITH ITEM 24
18	201,028	SPACER (GRANTA PSU ONLY)	3	O.D. 12MM/ID 6.5MM/1.5MM
17		M4 WASHER PLAIN	3	USE WITH ITEMS 22-25
16		M4 x 8MM CHEESE HEAD POSIDRIV	3	USE WITH ITEM 22
15		4BA x ½" NYLON CHEESE HEAD	3	USE WITH ITEMS 23,25
14				
13		No. 8 x 8MM FLANGE HEAD POSIDRIV	4	BLACK SELF TAP
12				
11		WIRE 7/0.2" WHITE PVC	2	2" LENGTH
10		B.N.C. CONNECTOR 75R	1	PANEL MOUNT SK2
9				
8		BUMP ON FEET	4	
7				
6	201,027	CUT RIGID PVC LABEL REAR ACCESS	1	
5	201,026	CUT RIGID PVC LABEL BOTTOM ACCESS	1	
4	103,001	KEYBOARD ASSEMBLY (IN SPKR)		
3				
2	103,000	MAIN PCB ASSEMBLY	1	
1	201,023	CASE LOWER	1	

ISS	DATE					
1	2.82	RA				

CASE LOWER ASSEMBLY

dwg no. 103,004 /P

© COPYRIGHT 198
ACORN COMPUTERS Ltd
FULBOURN ROAD
CHERRY HINTON
CAMBRIDGE CB1 4JN

ACORN COMPUTERS Ltd

drg no		used on	
201,021 /P		BBC COMPUTER KEYBOARD ASSEMBLY 103,001	Sht 1 of 1

ITEM	PART NO	DESCRIPTION	QTY	REMARKS
15				
14				
13				
12				
11				
10				
9				
8		DOUBLE SIDES TAPE 1/16" THICK	1	½" x ½"
7				
6		WIRE 7/0.2" WHITE PVC	2	11" LENGTH
5				
4		HOUSING	1	MOLEX 6471-02-1
3		TERMINAL	2	MOLEX 4809T-L
2				
1		SPEAKER 2.5", 8Ω, 0.2W	1	FERRITE

RA		SPEAKER ASSEMBLY	
2.82		drg no. 201,021 /P	
1			

© COPYRIGHT 198
ACORN COMPUTERS Ltd
FULBOURN ROAD
CHERRY HINTON
CAMBRIDGE CB1 4JN

ACORN COMPUTERS Ltd

dwg no		/P	used on	Sht 1 of 1
-	003,000			

ITEM	PART NO	DESCRIPTION	QTY	REMARKS
30				
29				
28				
27				
26				
25		INDIVIDUAL BÓX CARDBOARD	1	
24				
23		CASE MOULD BOTTOM	1	POLYSTYRENE
22		CASE MOULD TOP	1	POLYSTYRENE
21				
20				
19		SPIRE NUT NO. 6	2	
18		NO. 6 x 16MM FLANGE HEAD POSIDRIV	4	BLACK SELFTAP
17				
16				
15				
14				
13				
12				
11		CASSETTE CABLE	1	
10		VIDEO CABLE	1	
9		WELCOME CASSETTE	1	
8	403,	INSTRUCTION MANUAL	1	
7				
6				
5		SET OF SERIAL NO. LABELS	1	
4				
3	103,004	CASE LOWER ASSEMBLY	1	
2	103,002	CASE UPPER ASSEMBLY	1	
1				

ISS	DATE	DRN	CHK	APP
1	2.82	RA		

BBC COMPUTER MODEL A

dwg no. 003,000 /P

© COPYRIGHT 1982
ACORN COMPUTERS Ltd
FULBOURN ROAD
CHERRY HINTON
CAMBRIDGE CB1 4JN

ACORN COMPUTERS Ltd

drg no	103,000 /P	used on	CASE LOWER ASSEMBLY 103,004	Sht 1 of 6

ITEM	PART No	DESCRIPTION	QTY	REMARKS
30				
29	500,822	RESISTOR 8K2 Ω ¼W 10% CARBON FILM	2	R87,88
28	500,562	RESISTOR 5K6 Ω ¼W 10% CARBON FILM	1	R161
27	500,472	RESISTOR 4K7 Ω ¼W 10% CARBON FILM	7	R6,28,31,83,89,90,162
26	500,392	RESISTOR 3K9 Ω ¼W 10% CARBON FILM	4	R116,126,137,147
25				156,160
24				73,81,85,93,96,108
23	500,332	RESISTOR 3K3 Ω ¼W 10% CARBON FILM	15	R10,55,65,68,69,70,72
22	500,272	RESISTOR 2K7 Ω ¼W 10% CARBON FILM	3	R71,109,141
21	500,222	RESISTOR 2K2 Ω ¼W 10% CARBON FILM	7	R74,95,97,117,136,152,163
20	500,152	RESISTOR 1K5 Ω ¼W 10% CARBON FILM	3	R127,138,146
19	500,122	RESISTOR 1K2 Ω ¼W 10% CARBON FILM	1	R154
18				135,139,140,145
17				101,103,107,115,118,134
16	500,102	RESISTOR 1K Ω ¼W 10% CARBON FILM	17	R29,33,37,53,98,99,100
15				
14	500,821	RESISTOR 820 Ω ¼W 10% CARBON FILM	3	R91,92,148
13	500,681	RESISTOR 680 Ω ¼W 10% CARBON FILM	3	R150,155,157
12	500,471	RESISTOR 470 Ω ¼W 10% CARBON FILM	4	R123,128,151,158
11	500,151	RESISTOR 150 Ω ¼W 10% CARBON FILM	4	R22,23,49,58
10	500,101	RESISTOR 100 Ω ¼W 10% CARBON FILM	9	R94,102,104,105,119,125
9	500,820	RESISTOR 82 Ω ¼W 10% CARBON FILM	3	R120,121,122 [142,153,14
8	500,680	RESISTOR 68 Ω ¼W 10% CARBON FILM	6	R110-113,129,130
7	500,560	RESISTOR 56 Ω ¼W 10% CARBON FILM	3	R106,124,131
6	500,100	RESISTOR 10 Ω ¼W 10% CARBON FILM	3	R14,18,57
5				
4	520,120	RESISTOR 12 Ω 1W 10% CARBON FILM	1	R114
3				
2	103,000/A	ASSEMBLY DRAWING		1 PER WORKS ORDER
1	203,000	PRINTED CIRCUIT BOARD ISS3	1	

ISS	DATE				
1	2.82	RA			
2	4.82	RA			

title: MAIN CIRCUIT BOARD MODEL A

drg no. 103,000 /P

© COPYRIGHT 1982
ACORN COMPUTERS Ltd
FULBOURN ROAD
CHERRY HINTON
CAMBRIDGE CB1 4JN

ACORN COMPUTERS Ltd

ITEM	PART NO	DESCRIPTION	QTY	REMARKS
60				
59				
58				
57				
56				
55				
54				
53				
52				
51				
50	580,103	POTENTIOMETER 10 VERT. MIN. PRESET	1	VR1
49				
48	590,682	RESISTOR PACK S.I.P. 6K8 Ω	1	RP1
47				
46	500,105	RESISTOR 1MΩ ¼W 10% CARBON FILM	3	R13,20,21
45				
44	500,824	RESISTOR 820K Ω ¼W 10% CARBON FILM	1	R79
43	500,274	RESISTOR 270K Ω ¼W 10% CARBON FILM	1	R159
42	500,224	RESISTOR 220K Ω ¼W 10% CARBON FILM	2	R12,86
41				
40	500,154	RESISTOR 150K Ω ¼W 10% CARBON FILM	3	R32,78,82
39	500,124	RESISTOR 120K Ω ¼W 10% CARBON FILM	2	R132,133
38	500,104	RESISTOR 100K Ω ¼W 10% CARBON FILM	5	R5,7,11,75,77
37				
36	500,393	RESISTOR 39K Ω ¼W 10% CARBON FILM	5	R9,15,24,50,80
35	500,223	RESISTOR 22K Ω ¼W 10% CARBON FILM	2	R4,16
34	500,153	RESISTOR 15K Ω ¼W 10% CARBON FILM	1	R144
33	500,123	RESISTOR 12K Ω ¼W 10% CARBON FILM	1	R143
32				76,84
31	500,103	RESISTOR 10K Ω ¼W 10% CARBON FILM	11	R1-3,8,17,27,30,66,67

ISS	DATE	DRN
1	2.82	RA
2	4.82	RA

title: MAIN CIRCUIT BOARD MODEL A

drg no. 103,000 /P

© COPYRIGHT 1982
ACORN COMPUTERS Ltd
FULBOURN ROAD
CHERRY HINTON
CAMBRIDGE CB1 4JN

ACORN COMPUTERS Ltd

drg no 103,000 /P	used on CASE LOWER ASSEMBLY 103,004	Sht 3 of 6

ITEM	PART NO	DESCRIPTION	QTY	REMARKS
90	610,047	CAPACITOR 47uF 10V TANTALUM	2	C36,54
89	635,100	CAPACITOR 10uF 16 RADIAL ELEC.	2	C5,9
88	610,010	CAPACITOR 10uF 10V TANTALUM	3	C30,47,57
87	635,047	CAPACITOR 4u7F 35V RADIAL ELEC.	1	C2
86	610,005	CAPACITOR 4u7F 10V TANTALUM	1	C28
85	613,100	CAPACITOR 1uF 35V TANTALUM	1	C27
84				
83	634,002	CAPACITOR 2n2f PLATE CERAMIC	2	C38,39
82	628,101	CAPACITOR 100NF DISC CERAMIC	5	C6,8,15,21,24
81	628,470	CAPACITOR 47NF DISC CERAMIC	2	C20,34
80	680,001	CAPACITOR 33NF DISC CERAMIC 33/47NF*	80	A1-80 (*DECOUPLER)
79	650,333	CAPACITOR 33NF POLYESTER	1	C25
78	629,010	CAPACITOR 10NF PLATE CERAMIC	3	C10,40,45
77	629,004	CAPACITOR 4N7F PLATE CERAMIC	2	C32,33
76	629,002	CAPACITOR 2N2F PLATE CERAMIC	5	C1,3,7,11,29
75	629,001	CAPACITOR 1NF PLATE CERAMIC	2	C13,17
74				
73	632,047	CAPACITOR 47PF PLATE CERAMIC	2	C43,46
72	630,082	CAPACITOR 830PF PLATE CERAMIC	2	C31,35
71	630,039	CAPACITOR 390PF PLATE CERAMIC	1	C52
70	631,270	CAPACITOR 270PF PLATE CERAMIC	1	C48
69	631,220	CAPACITOR 220PF PLATE CERAMIC	1	C41
68				
67	631,150	CAPACITOR 150PF PLATE CERAMIC	2	C49,42
66	631,100	CAPACITOR 100PF PLATE CERAMIC	2	C53,55
65	631,047	CAPACITOR 47PF PLATE CERAMIC	1	C50
64	631,039	CAPACITOR 39PF PLATE CERAMIC	1	C56
63	631,033	CAPACITOR 33PF PLATE CERAMIC	1	C37
62	631,022	CAPACITOR 22PF PLATE CERAMIC	1	C51
61	631,010	CAPACITOR 10PF PLATE CERAMIC	1	C12

DR	DATE	
RA	2.82	
RA	4.82	

title MAIN CIRCUIT BOARD MODEL A

drg no. 103,000 /P

© COPYRIGHT 1982
ACORN COMPUTERS Ltd
FULBOURN ROAD
CHERRY HINTON
CAMBRIDGE CB1 4JN

ACORN COMPUTERS Ltd

drg no 103,000 /P	used on CASE LOWER ASSEMBLY 103,004	Sht 4 of 6

ITEM	PART NO	DESCRIPTION	QTY	REMARKS
120	800,140	I.C. SOCKET D.I.L. 40 PIN	5	IC1-3,69,78
119	800,128	I.C. SOCKET D.I.L. 28 PIN	11	IC5-7,51,52,73,88,98-100
118	800,124	I.C. SOCKET D.I.L. 24 PIN	1	IC4
117	800,120	I.C. SOCKET D.I.L. 20 PIN	3	IC70,71,72
116	800,116	I.C. SOCKET D.I.L. 16 PIN	13	IC61-68,74-76,85,87
115	800,114	I.C. SOCKET D.I.L. 14 PIN	8	IC77,79-84,86
114				
113	783,906	TRANSISTOR 2N3906	1	Q10
112	780,309	TRANSISTOR BC309	2	Q7,8
111	780,239	TRANSISTOR BC 239	8	Q1-6,9,11
110				
109				
108	810,001	RELAY FBR 210-5V	1	RL1
107				
106				
105	794,148	DIODE IN 4148	15	D1,2,6-15,19-22
104	794,002	DIODE IN 4002	3	D16,17,18
103				
102				
101	820,177	CRYSTAL 17.7345 MHZ	1	X2
100	820,160	CRYSTAL 16 MHZ	1	X1
99				
98				
97	860,005	CHOKE 33 uH SIGMA SC30	1	L1
96				
95				
94	699,001	TRIMMING CAPACITOR 2-22PF	1	VC1
93				
92				
91	621,470	CAPACITOR 47uF 10 AXIAL ELEC.	3	C14,16,26

ISS	DATE	DRN			
1	2.82	RA			
2	4.82	RA			

title MAIN CIRCUIT BOARD MODEL A

drg no. 103,000 /P

© COPYRIGHT 1982
ACORN COMPUTERS Ltd
FULBOURN ROAD
CHERRY HINTON
CAMBRIDGE CB1 4JN

ACORN COMPUTERS Ltd

drg no 103,000 /P	used on CASE LOWER ASSEMBLY 103,004	Sht 5 of 6

ITEM	PART NO	DESCRIPTION	QTY	REMARKS
150				
149	738,095	INTEGRATED CIRCUIT 81LS95	6	IC 8-13
148	706,489	INTEGRATED CIRCUIT 76489 AN	1	IC18
147				
146	770,555	INTEGRATED CIRCUIT LM555 CN	1	IC16
145	770,386	INTEGRATED CIRCUIT LM386N-1	1	IC19
144	770,324	INTEGRATED CIRCUIT LM324N	2	IC17,35
143				
142	742,283	INTEGRATED CIRCUIT 74LS283	1	IC39
141	742,273	INTEGRATED CIRCUIT 74LS273	1	IC15
140	742,259	INTEGRATED CIRCUIT 74LS259	1	IC32
139	742,245	INTEGRATED CIRCUIT 74LS245	1	IC14
138	742,163	INTEGRATED CIRCUIT 74LS163	1	IC42
137	742,139	INTEGRATED CIRCUIT 74LS139	2	IC20,26
136	741,139	INTEGRATED CIRCUIT 74S139	1	IC45
135	742,138	INTEGRATED CIRCUIT 74LS138	1	IC24
134	742,086	INTEGRATED CIRCUIT 74LS86	3	IC38,47,48
133	742,074	INTEGRATED CIRCUIT 74LS74	4	IC30,31,34,44
132	741,074	INTEGRATED CIRCUIT 74S74	1	IC46
131	742,051	INTEGRATED CIRCUIT 74LS51	1	IC28
130	742,032	INTEGRATED CIRCUIT 74LS32	1	IC29
129	742,030	INTEGRATED CIRCUIT 74LS30	2	IC22,23
128	742,020	INTEGRATED CIRCUIT 74LS20	1	IC25
127	742,010	INTEGRATED CIRCUIT 74LS10	1	IC36
126	742,004	INTEGRATED CIRCUIT 74LS04	2	IC33,37
125	741,004	INTEGRATED CIRCUIT 74S04	1	IC43
124	742,002	INTEGRATED CIRCUIT 74LS02	1	IC41
123	742,000	INTEGRATED CIRCUIT 74LS00	3	IC21,49,50
122	741,000	INTEGRATED CIRCUIT 74S00	1	IC40
121	740,038	INTEGRATED CIRCUIT 7438	1	IC27

Issue	1	2			
Date	2,82	4,82			
By	RA	RA			

title MAIN CIRCUIT BOARD MODEL A

drg no. 103,000 /P

© COPYRIGHT 1982
ACORN COMPUTERS Ltd
FULBOURN ROAD
CHERRY HINTON
CAMBRIDGE CB1 4JN

ACORN COMPUTERS Ltd

drg no		used on		Sht 6 of 6
103,000 /P		CASE LOWER ASSEMBLY 103,004		
180				
179				
178				
177	800,150	FASTON TAB	9	AMP 61134-1
176				
175	201,029	HEATSINK	1	FIT TO IC6
174				
173	800,070	MOLEX SHUNT	11	S21(2), S18-20, 22, 25 26, 31-33
172	800,051	LINK 3 WAY MOLEX	9	S18-20,22,25,26,31-33
171				
170	800,050	PLUG 2 WAY MOLEX (SPEAKER S21)	3	PL15, S21(2)
169	800,055	PLUG 10 WAY MOLEX (SERIAL ROM)	1	PL14
168	800,059	PLUG 17 WAY MOLEX (KEYBOARD)	1	PL13
167				
166	800,003	SOCKET D.I.N. MAB7SH-L 7 WAY	1	SK5
165				
164	825,000	SOCKET UM1233-E26UHF MOD (ASTEC)	1	SK1
163				
162	201,603	INTEGRATED CIRCUIT 23128	1	IC52 (BASIC)
161	201,604	INTEGRATED CIRCUIT 23128	1	IC51 (OPERATING SYSTEM
160	704,816	INTEGRATED CIRCUIT 4816 AP-3	8	IC53-60
159				
158	201,602	INTEGRATED CIRCUIT 2C199	1	IC7
157	201,601	INTEGRATED CIRCUIT 5C094	1	IC6
156	705,050	INTEGRATED CIRCUIT SAA5050	1	IC5
155				
154	706,850	INTEGRATED CIRCUIT 6850	1	IC4
153	706,845	INTEGRATED CIRCUIT 6845	1	IC2
152	706,522	INTEGRATED CIRCUIT 6522	1	IC3
151	706,502	INTEGRATED CIRCUIT 6502A	1	IC1
ITEM	PART NO	DESCRIPTION	QTY	REMARKS

ISS	DATE	DRN
1	2,82	RA
2	4,82	RA

title: MAIN CIRCUIT BOARD MODEL A

drg no. 103,000 /P

© COPYRIGHT 1982
ACORN COMPUTERS Ltd
FULBOURN ROAD
CHERRY HINTON
CAMBRIDGE CB1 4JN

ACORN COMPUTERS Ltd

12. EXPANDING MODEL A TO MODEL B

12.1. In order to expand the BBC computer from the Model A to the Model B specification, the following components are required:-

8 off 4816AP-3 DRAM's	IC's 61 to 68
1 off 6522 VIA	IC69
2 off 74LS244 TTL	IC'S 70, 71
1 off 74LS245 TTL	IC72
1 off uPD7002 ADC	IC73
1 off 88LS120 RS423	IC74
1 off 3691 RS423	IC75
1 off 74LS163 TTL	IC76
1 off 74LS00 TTL	IC77

1 off MAB 6H	6 pin DIN	SK3
1 off MAB5WH	5 pin DIN	SK4
1 off 164801-1	15 way D type	SK6
2 off 3431-1302	34 way header	PL's 8 and 11
1 off 3429-1302	26 way header	PL9
1 off 3428-1302	20 way header	PL10
1 off 3432-1302	40 way header	PL12

(prime source parts only, second source part numbers may be used.)

12.2. To implement this expansion, first switch off and disconnect the Microcomputer. Unscrew the four case top securing screws and remove the case top. Disconnect the keyboard

from the main circuit board and remove it from the case by unscrewing the two nuts and bolts which secure it.

Disconnect the seven power supply connections from the main circuit board. Desolder the two wires to the BNC video connector. Unscrew the four screws securing the main circuit board, sliding the main circuit board forward and removing it from the case.

Insert the integrated circuits in the expansion kit into the sockets which are already on the main circuit board. Solder the connectors on to the main circuit board.

Re-assemble the computer and then test it either functionally or, if available, by using the final inspection test jig and the Model B testing audio cassette.

13. DISC AND SPEECH EXPANSIONS

13.1. In order to fit the disc interface, the following components are required:-

1 off 74LS00 TTL	IC77
1 off 8271 Controller	IC78
2 off 7438 TTL	IC's 79 and 80
2 off 74LS393 TTL	IC's 81 and 86
1 off 74LS10 TTL	IC82
2 off CD4013B CMOS	IC's 83 and 84
1 off CD4020B CMOS	IC85
1 off 74LS123 TTL	IC87
1 off 23128 DFS ROM	IC88

(prime source parts only, second source part numbers may be used.)

13.2. To implement this expansion, first switch off and disconnect the microcomputer. Unscrew the four case top securing screws and remove the case top. Disconnect the keyboard from the main circuit pcb and remove it by unscrewing the two securing bolts.

Disconnect the seven power supply connections from the main circuit board and desolder the two wires from the rear panel BNC connector. Remove the four screws retaining the main circuit board and slide it out of the case.

Insert all the above IC's into the sockets provided on the main circuit board.

Insert a wire link connecting the two pins of 58 and cut the copper track connecting the two pins of 59.

If the existing power supply does not incorporate an auxiliary power output connector, it must be removed by unscrewing the three retaining bolts, and replaced with a suitable unit. The following link positions should be confirmed and corrected if necessary:-

Links 32 and 33 WEST
Links 20 and 22 NORTH
Link 21 contains two EAST/WEST links
Link 18 NORTH and Link 19 EAST

It should be ensured that the ROM's are in the following positions:-

OS ROM in IC51
BASIC ROM in IC52
DFS ROM in IC88

Re-assemble the computer and test it, either functionally or, if available, by using the final inspection test jig and the model 'B' audio test cassette.

13.4. To add the speech interface to the Microcomputer, plug the TMS 5220 speech processor into position IC99 and the TMS 6100 speech memory into position IC98. The speech system is then operational.

13.5. Two further speech memory positions are provided on the keyboard where the memories will be in the form of plug

in modules through the hole to the left of the keyboard. A 10 way ribbon cable is required to connect the main circuit board to the keyboard. On the keyboard sockets for the two plug in modules must be fitted together with a strip of 10 pins for the main circuit board cable to plug on to.

14. SERVICE REPORT

14.1. Copies of the following form should be filled in and sent to the Service Department at Acorn Computers when a BBC Microcomputer has been repaired. Outside of the United Kingdom, the forms should be used as directed by the national dealer.

14.2. In the case of repairs under warranty, this form provides the mechanism by which the service organisation can be reimbursed for work done and re-stocked with servicing spare parts. The warranty period is 26 weeks from the date of despatch from Acorn Computers customer order fulfilment house. The warranty period is extended by 26 weeks from the date of a repair only for those new parts used.

14.3. For repairs outside the warranty period, the form is used to report faults back to Acorn and the customer is charged at the agreed rate by the service organisation.

14.4. The form may also be used at any time to report modifications which have been carried out as directed by Acorn Computers for which the service organisation should be reimbursed. For instance, the replacement of the early EPROM operating system with the later ROM version.

ACORN COMPUTER
Acorn Computers Limited
Fulbourn Road, Cherry Hinton, Cambridge CB1 4JN. Telephone 0223 245200 Telex 817875 ACORN G

SERVICE REPORT No: .....

Customer's Name: ..... Date: .....

Machine Type: ..... Serial Number: .....

Description of fault: .....

.....

.....

.....

.....

.....

.....

.....

Repair carried out: .....

.....

.....

.....

.....

Time taken: .....

Costs

Parts used: ..... Labour: .....

..... Parts: .....

..... Total: .....

£

Customers receipt reference: .....

Customer's signature: .....

Maintenance Engineer's Signature: .....

Warranty*/Non-Warranty* Repair
* strike out as appropriate.

SWD/EH
1.3.82

15. RECOMMENDED SPARES

15.1. Here is a list of recommended spare parts which should be held by a service organisation per one hundred model A and/or model B Microcomputers in its area.

15.2.

5	Spare packaging polystyrene and cardboard
5	UHF TV leads
5	Welcome cassette tapes
5	User guides
1	Case upper half
2	Case upper spire clips
1	Case lower half
1	Stick on label set
2	Plastic rulers
3	Keyboard assemblies
5	Power supply modules
3	Keyboard connectors
5	Video processor ULA's 5C094
5	Serial processor ULA's 2C199
5	BASIC ROM's HM613128P-B01
5	OS ROM'S HM613128P-B02
3	Teletext ROM's SAA5050
3	ADC's uPD7002
3	CPU's 6502A
3	CRTC's 6845
5	VIA's 6522
3	ACIA's 6850
10	Octal buffers 81LS95
20	DRAM's HM4816AP-3
3	Cassette relays
3	UHF modulators
3	2 inch loudspeakers

5	17.73 MHz crystals
5	16 MHz crystals
5	Sound generators 76489A
5	Reset timers 555
5	Audio amplifiers LM386
5	Quad op-amps LM324
2	each TTL 74LS,00,02,04,10,20,30,32,51,74,86, 138,139,163,245,259,273,283
2	each TTL 74S00,04,74
2	each TTL 7438

15.3. A selection of screws, nuts, resistors, capacitors, connectors, IC sockets etc., should also be available. Also, the spares list should be added to as disc, speech and Econet expansions become available.

16. ASSEMBLY DRAWING

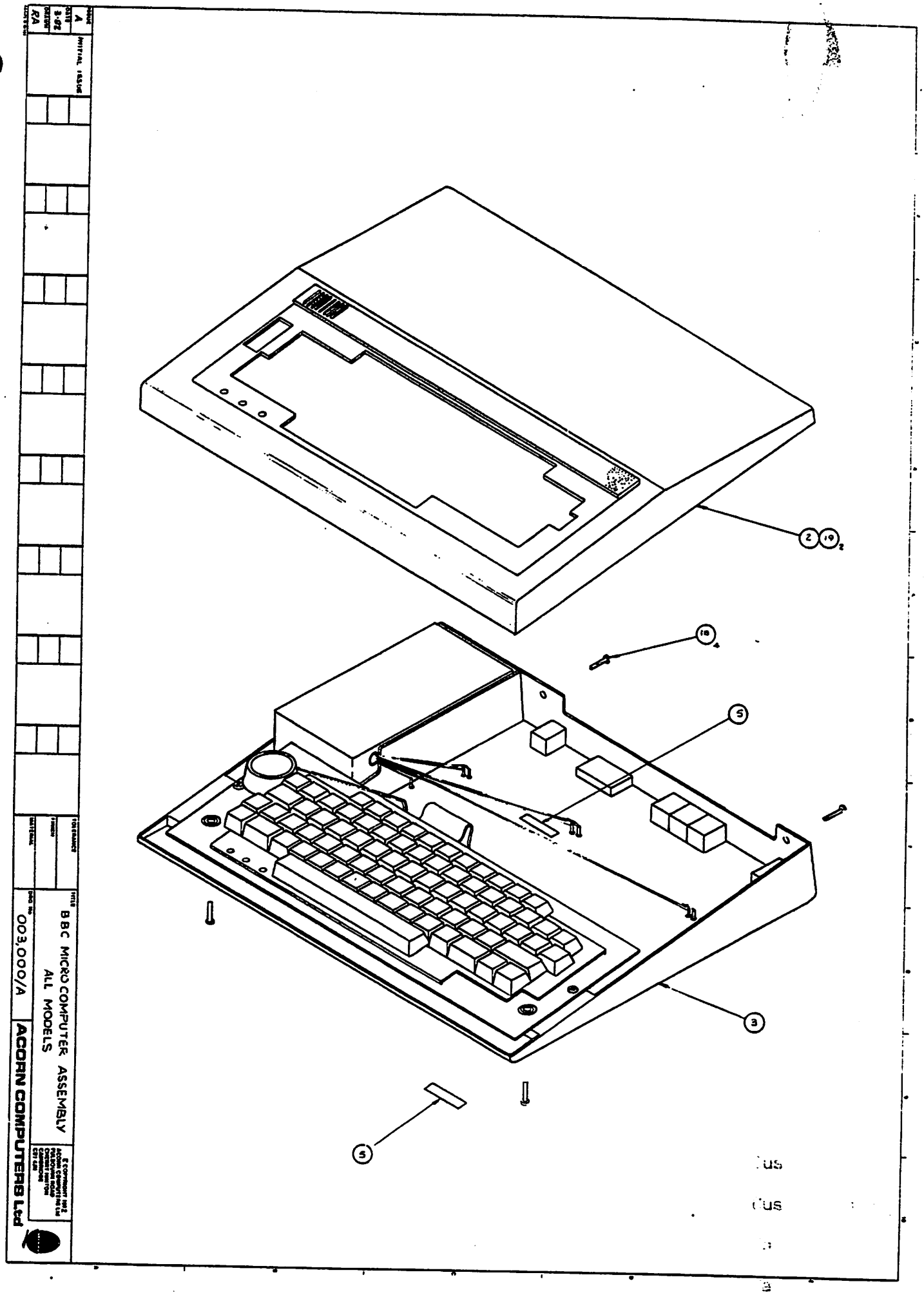

17. CASE UPPER ASSEMBLY DRAWING

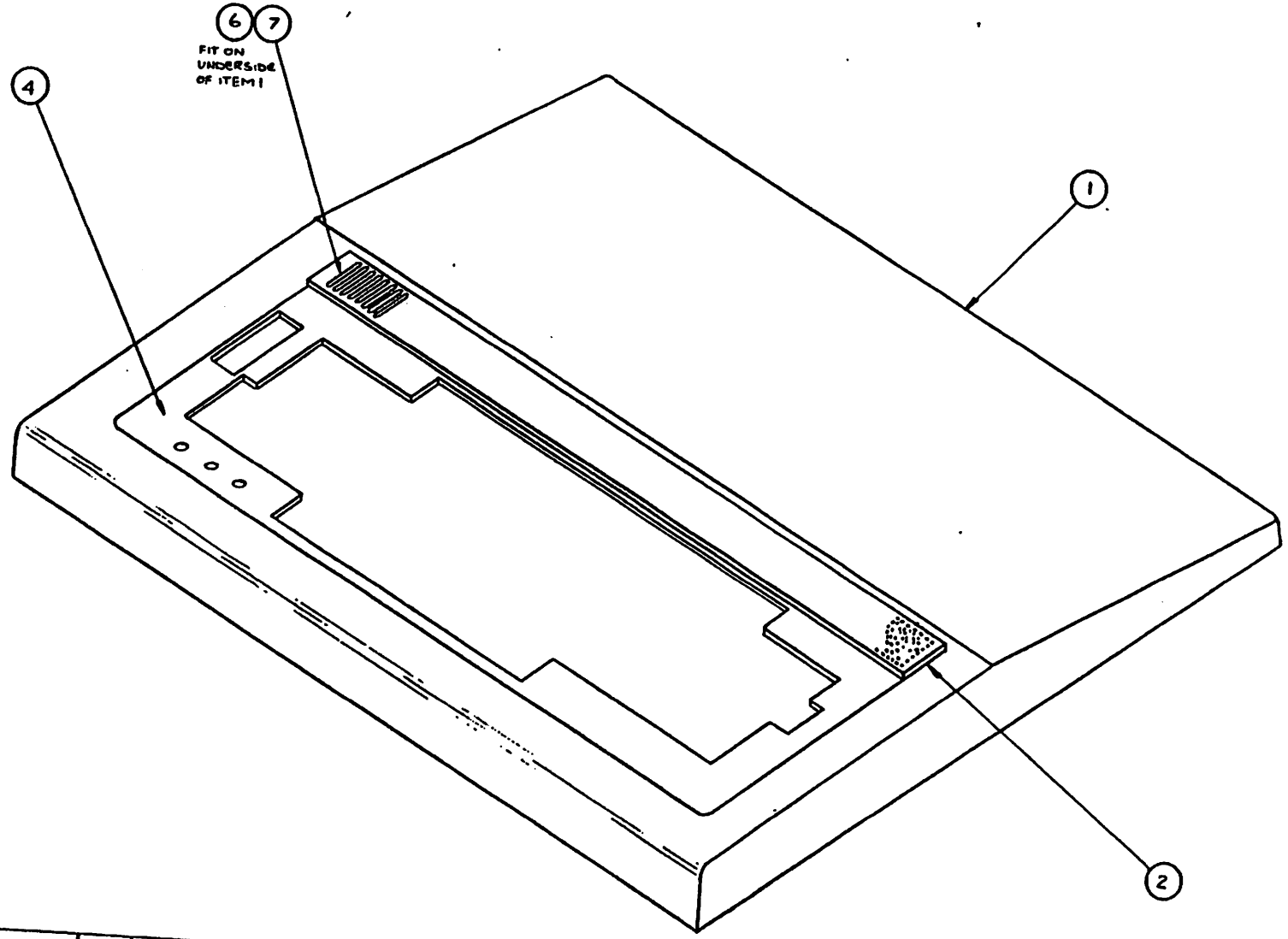

ISSUE A	INITIAL ISSUE	TOLERANCE	TITLE B.B.C. MICROCOMPUTER CASE UPPER ASSEMBLY - ALL MODELS	©COPYRIGHT 1982 ACORN COMPUTERS Ltd FULBOURN ROAD CHERRY HINTON CAMBRIDGE CB1 4JN	
DATE 3-82		FINISH			
DRAWN R A		MATERIAL	DRG. No 103,002/A	ACORN COMPUTERS Ltd	

18. CASE LOWER ASSEMBLY DRAWING

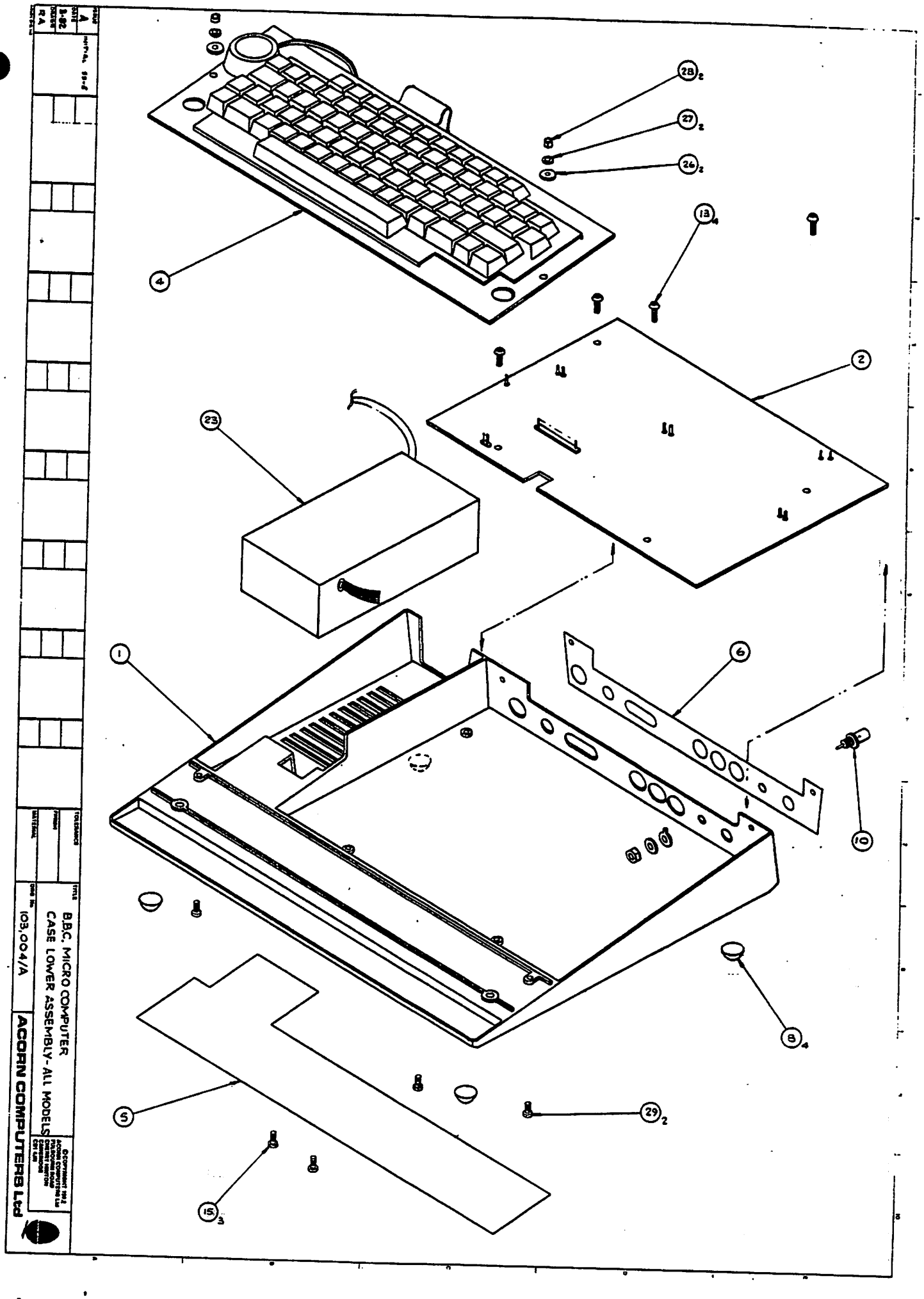

19. CIRCUIT BLOCK DIAGRAM

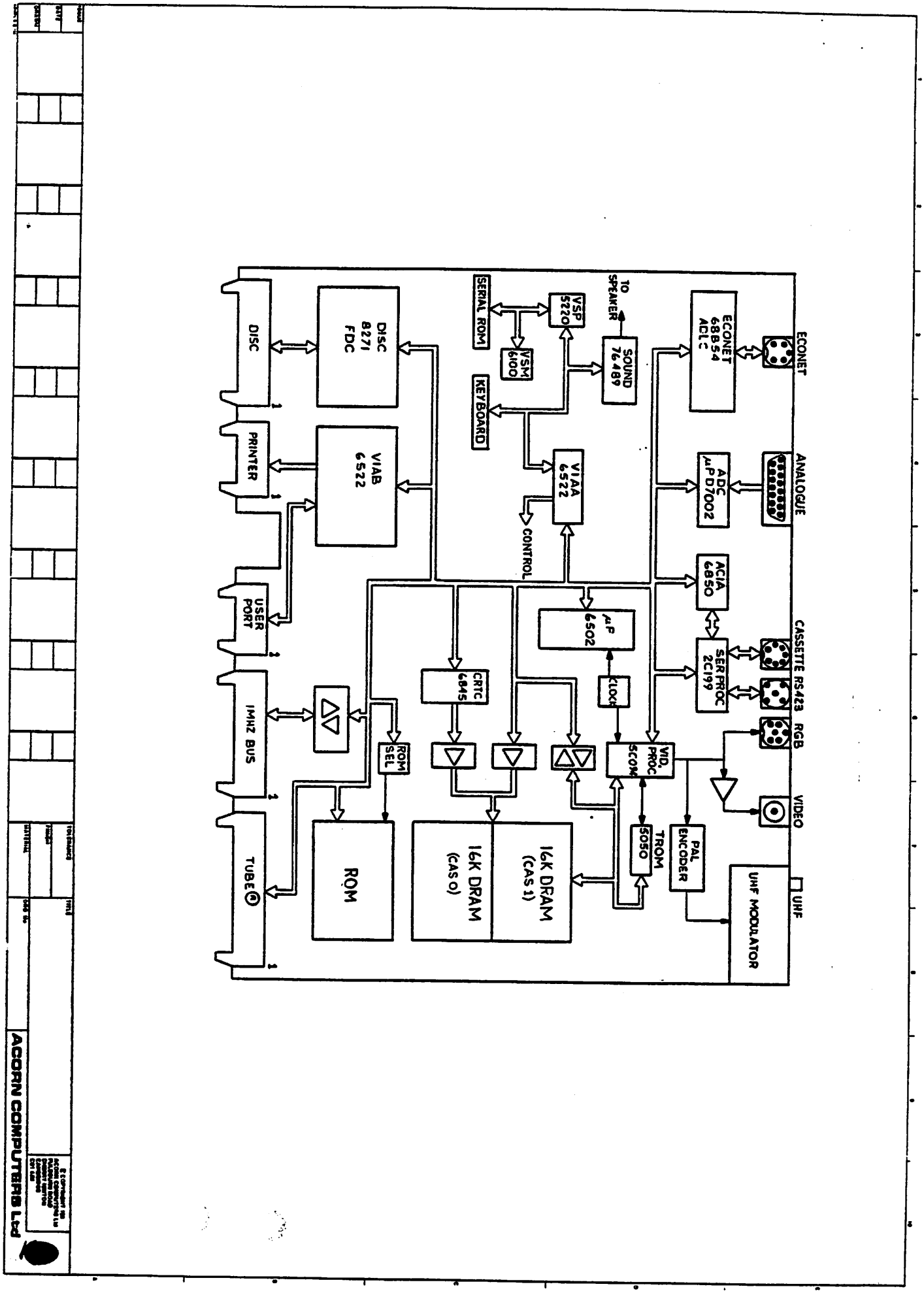

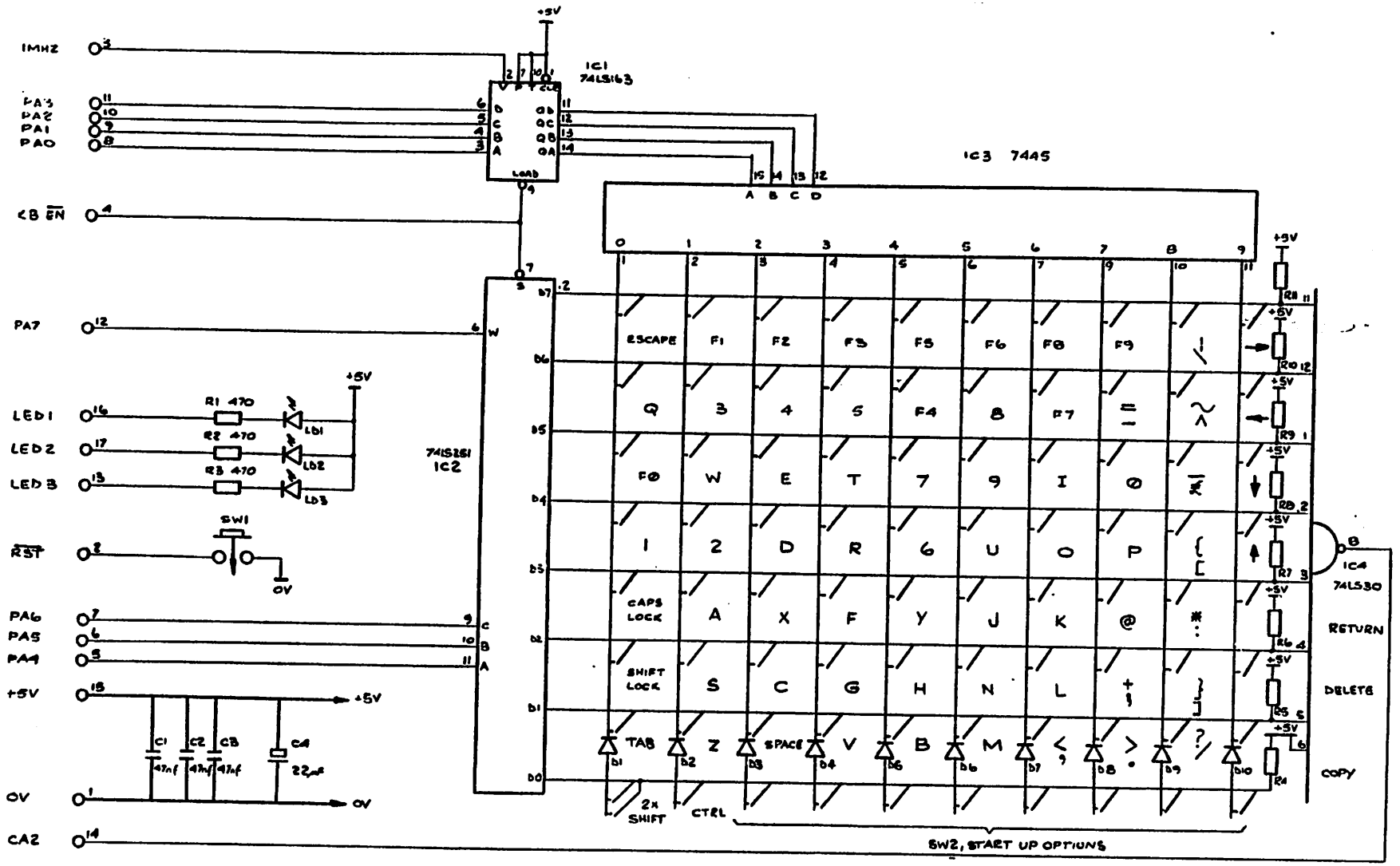

NOTE ALL DIODES IN4116

R4-11 10KΩ

| | | |

20. MAIN PCB CIRCUIT DIAGRAM

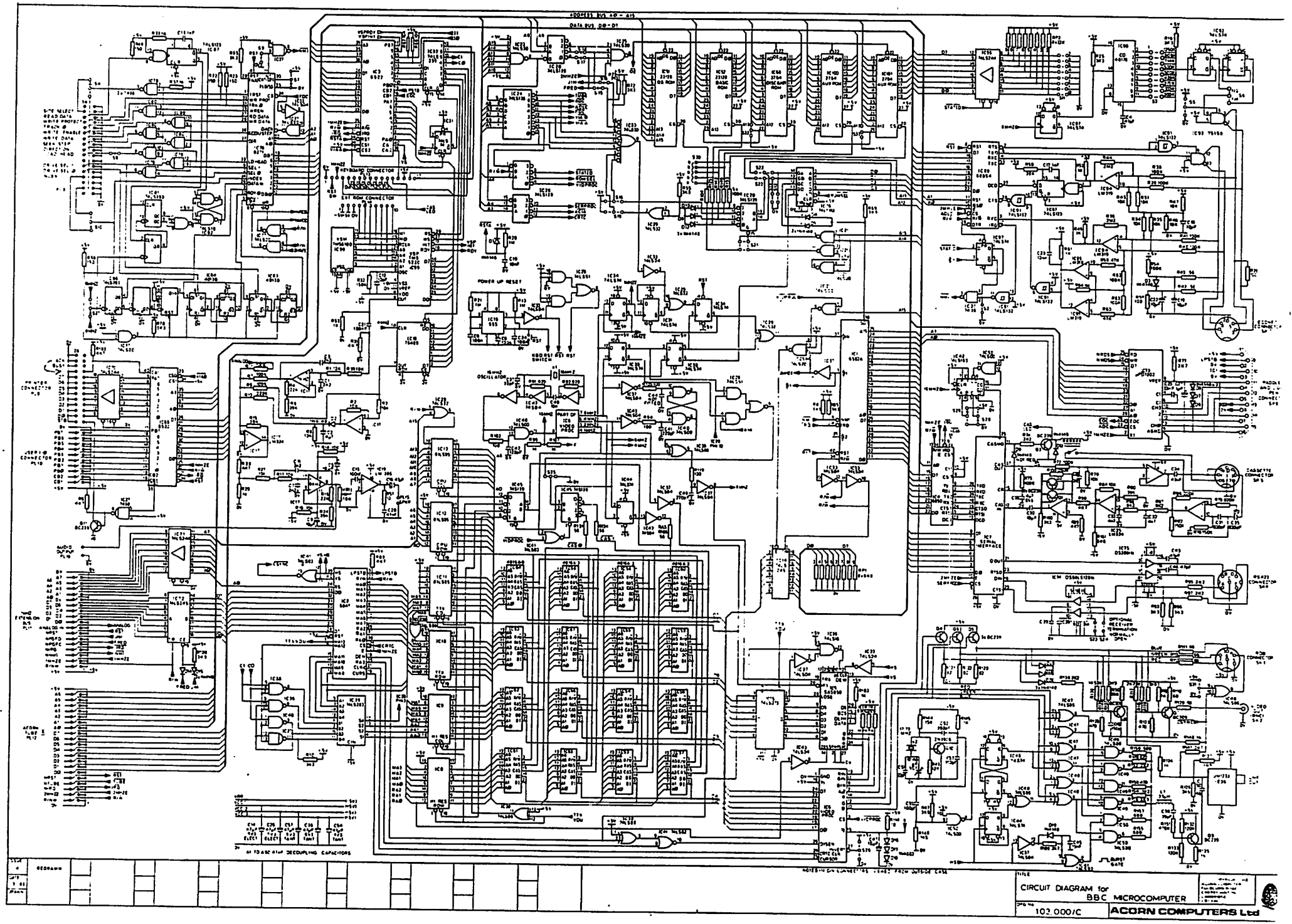

21. MAIN PCB LAYOUT

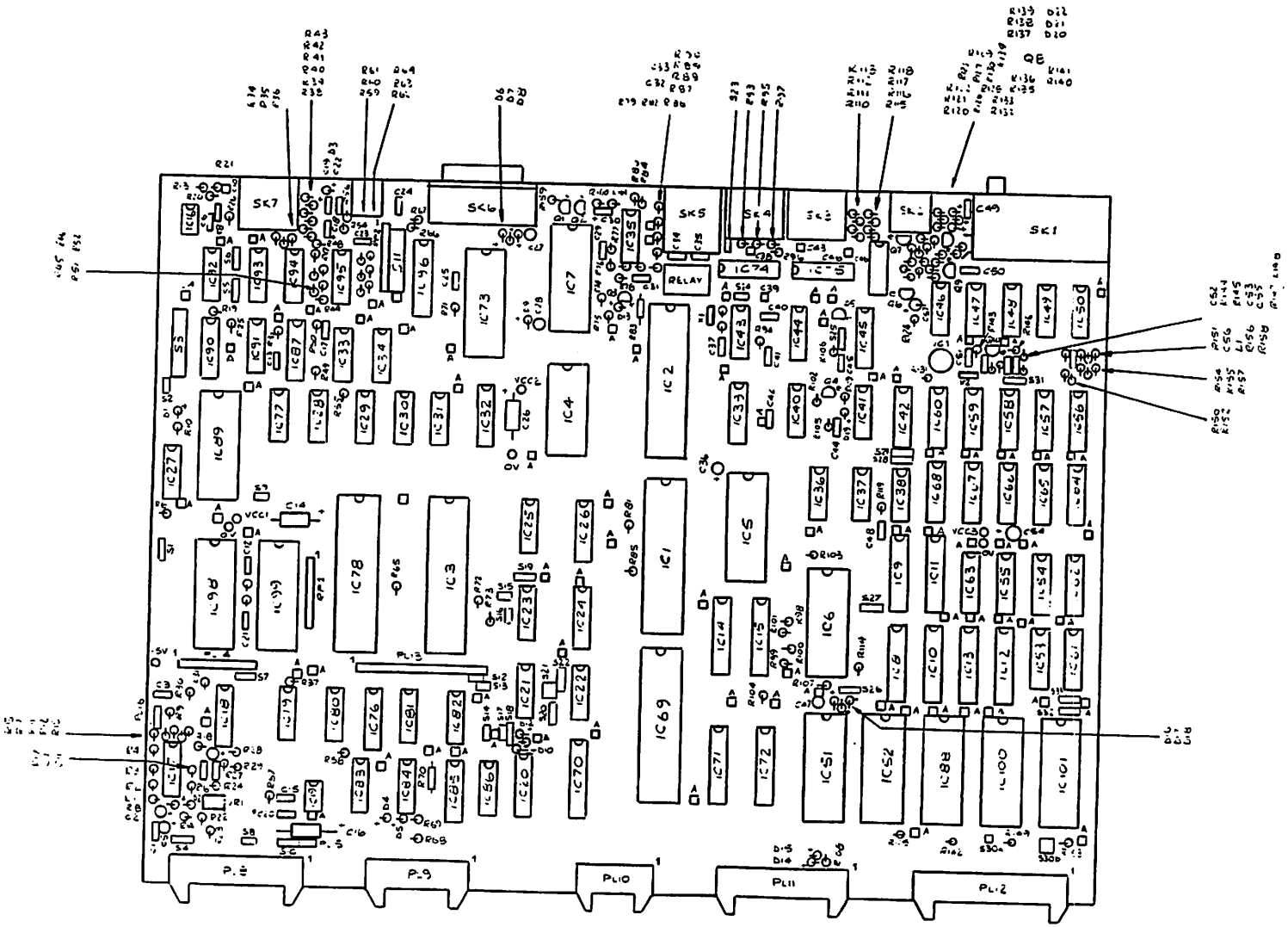

ISSUE A	INITIAL ISSUE	TOLERANCE	TITLE BEC COMPUTER MAIN BOARD ASSEMBLY DRAWING (FULLY EXPANDED)	©COPYRIGHT 1982 ACORN COMPUTERS Ltd FULBOURN ROAD CHERRY HINTON CAMBRIDGE CB1 4JN
DATE 3-82		FINISH		
DRAWN RA		MATERIAL	DRG. No. 103 000/A	ACORN COMPUTERS Ltd

23. POWER SUPPL' CIRCUIT DIAGRAM

	6	5	4	3	2	1
R	R1		R2,3,4,5,6,7,8	R9, 10, 11, 12, 13	R14, 15, 16, 17, 18, 19, 20, 21, 22	R23, 24, 25, 26, 27, 28, 29, 30
C	C1	C2, 3, 4 C7	C5, 6 C8, 9, 10	C11, 12 C13	C16, 17, 18 C14 C19 C21	C15 C20
L/T	T1	L2 L1	T3 L3	T2	L4 L5, 6, 7	
Q/D			D1 Q1 D2	Q2 D3 D4	D5, 6, 7, 8, 9, 10 Q3 Q4	
MISC	F1	DB1				Z1 SCR1

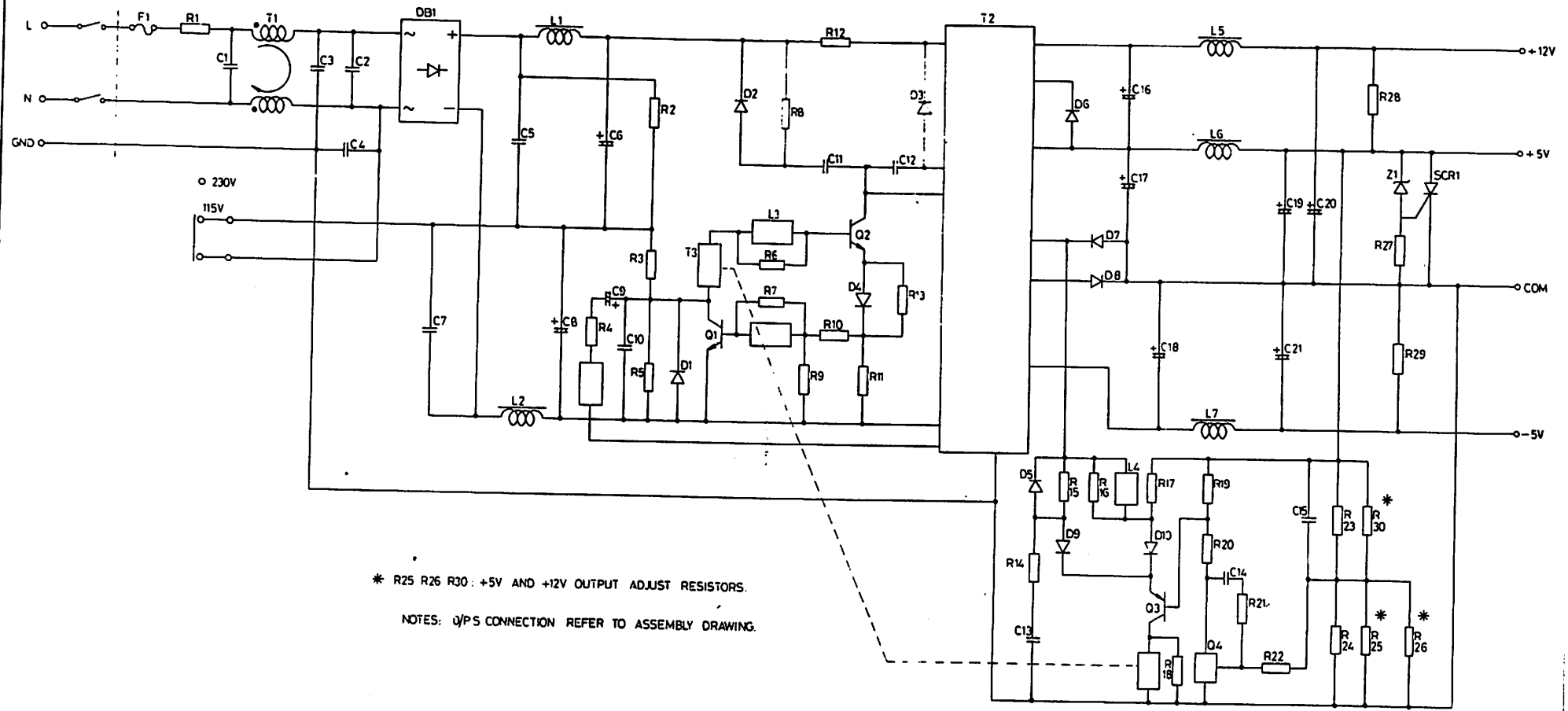

* R25 R26 R30 : +5V AND +12V OUTPUT ADJUST RESISTORS.

NOTES: O/P S CONNECTION REFER TO ASSEMBLY DRAWING.

APPD	CHK	DATE	REVISIONS	ISSUE	ECN
		10 JA	RELEASE DRAWING.	1	

UNLESS OTHERWISE SPECIFIED ALL DIMENSIONS ARE IN MM TOLERANCES: WHOLE NO ± ANGLE ± DECIMAL .X ± .XX ±	DO NOT SCALE DRAWING DRN DATE 9-DEC-81 CHK DATE 10 DEC 81. APPD DATE 11 DEC 81	TITLE (REPAIR MANNUAL) CIRCUIT DIAGRAM FIRST USED ON AA 11660 PART NO MATERIAL FINISH
	HONG KONG	SH 1 OF 1 A2

24. POWER SUPPLY PCB LAYOUT

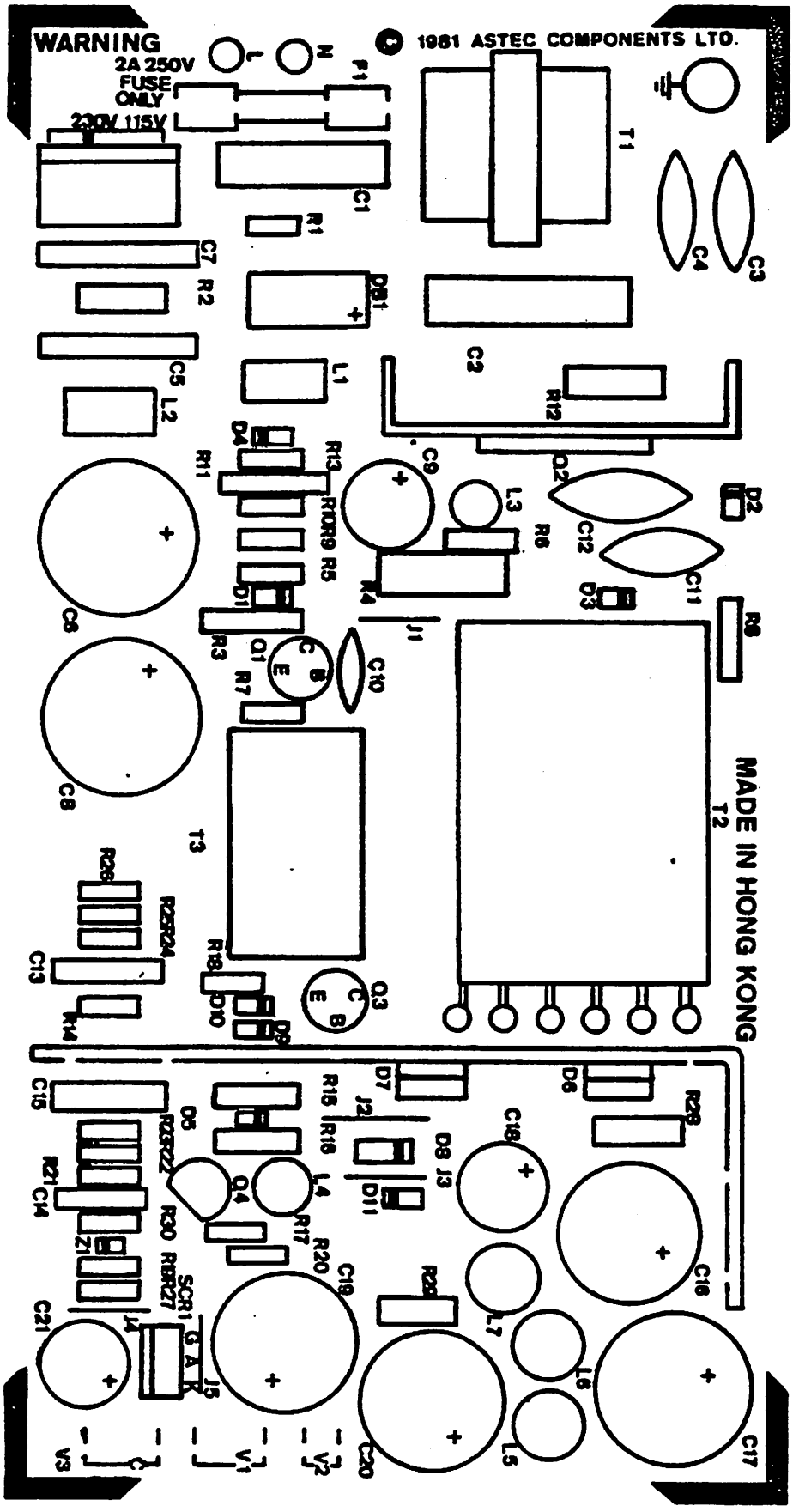

162.56MM

26. PET PCB LAYOUT

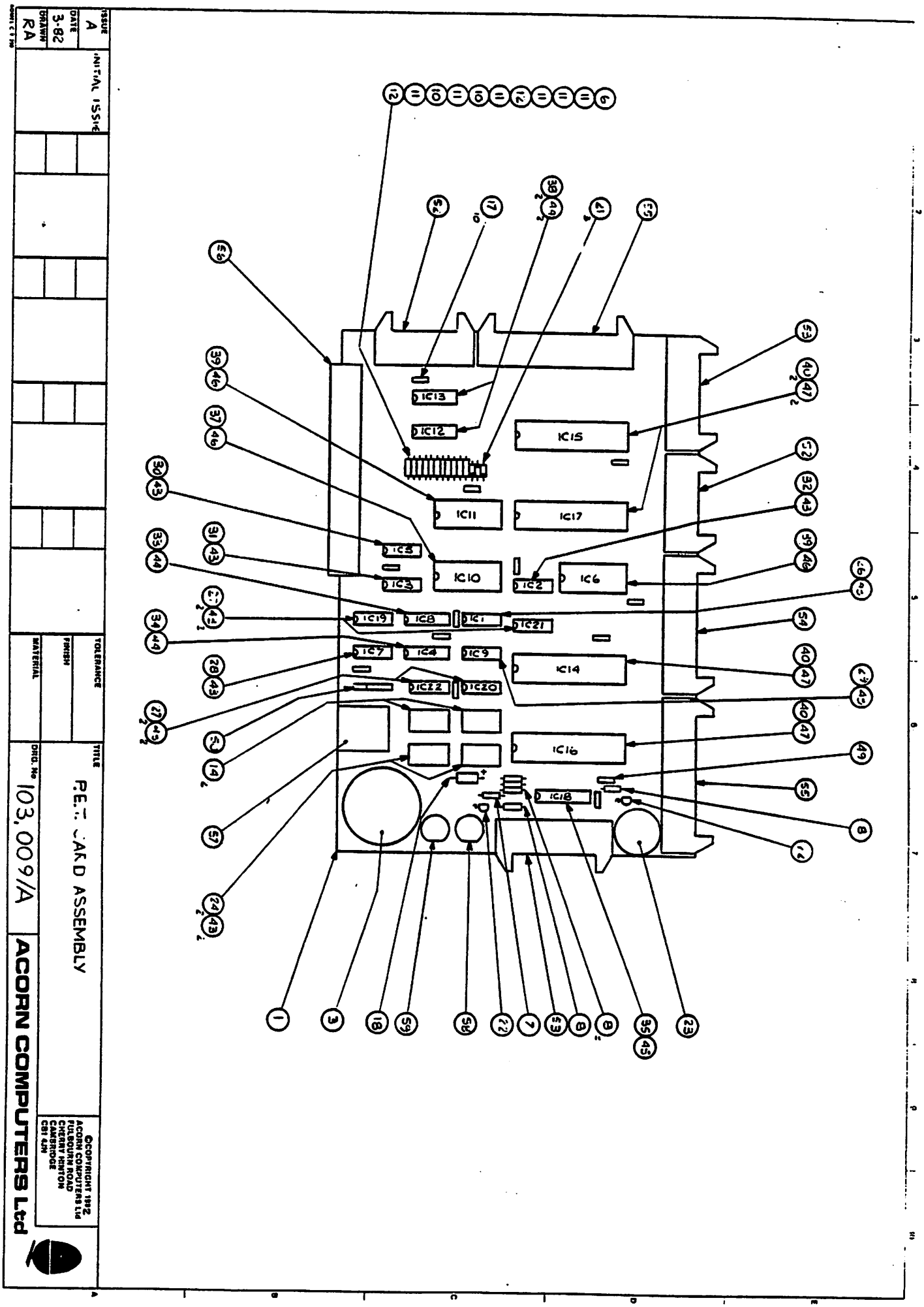

25. PET CIRCUIT DIAGRAM

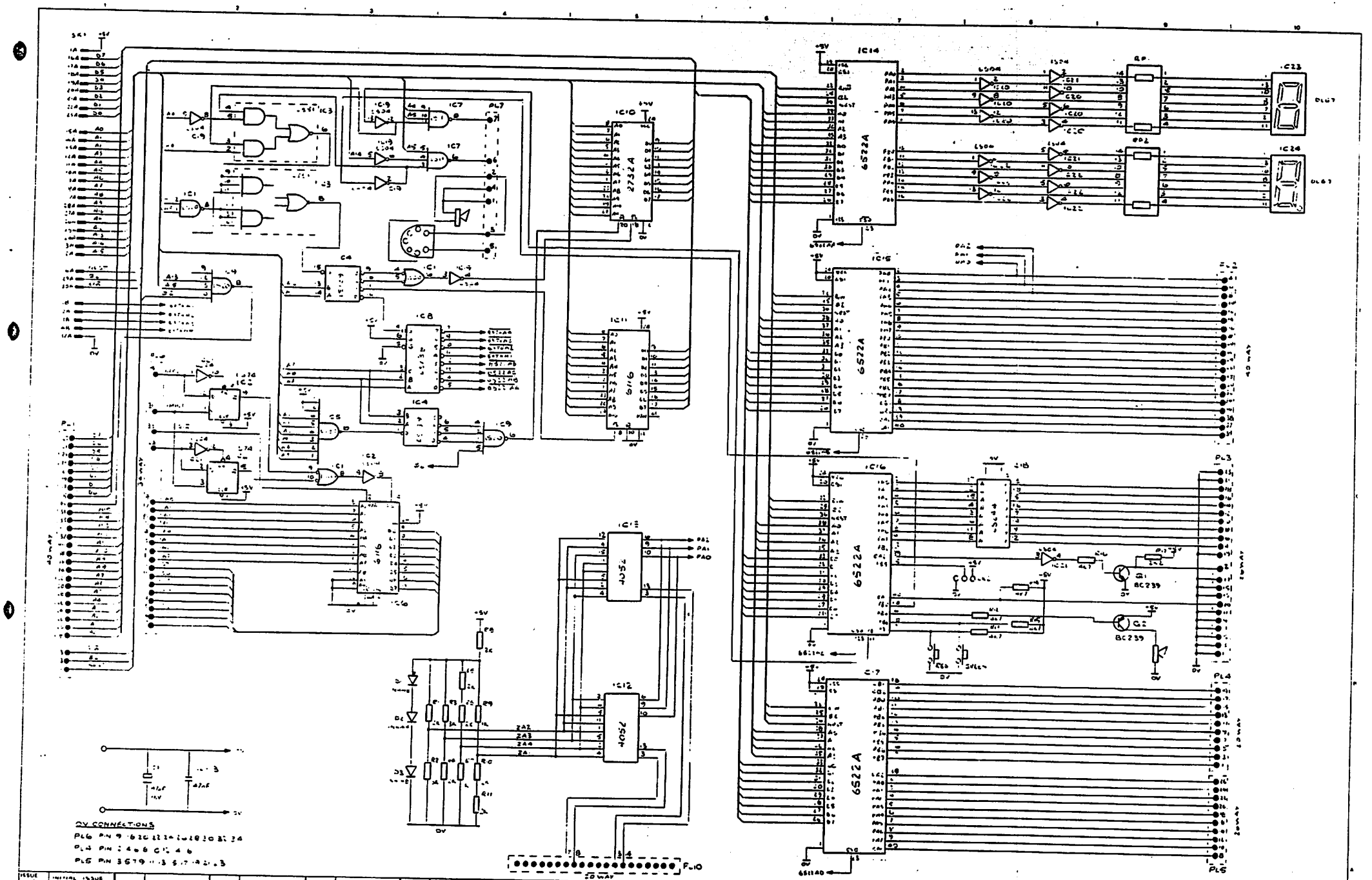

27, CIRCUIT DIAGRAM FO.PROTON FINAL TEST JIG

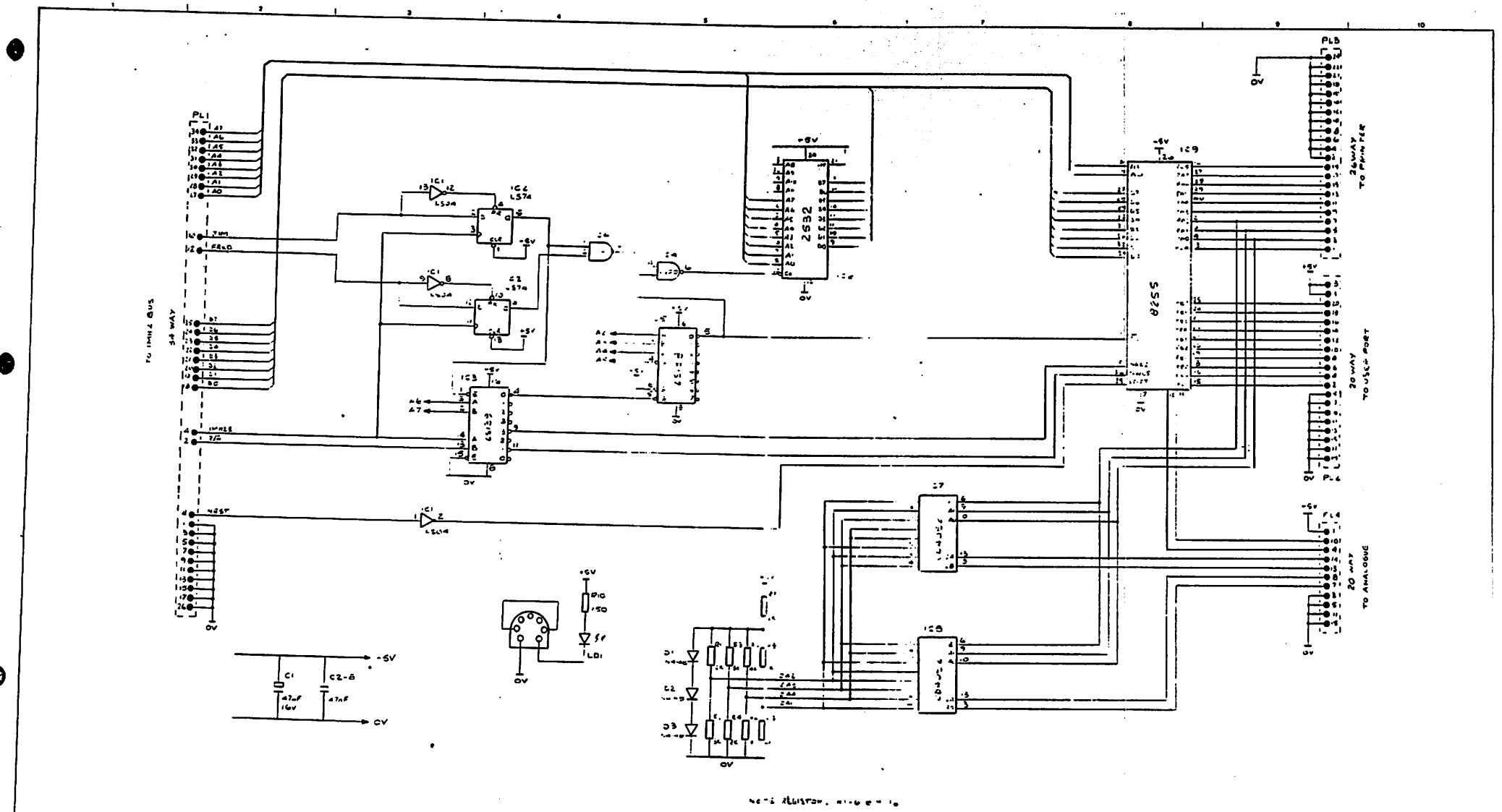

ISSUE A	INITIAL ISSUE		DRAWN RA	TITLE CIRCUIT DIAGRAM FOR FROTON FINAL TEST JIG	© COPYRIGHT 1982 ACORN COMPUTERS LTD FULBOURN ROAD CHERRY HINTON CAMBRIDGE CB1 4JN	
DATE 2-82			DATE 16-2-82	DRG. No 103,008 /C	ACORN COMPUTERS Ltd	
DRAWN RA			APPD			

28. FIT PCB LAYOUT

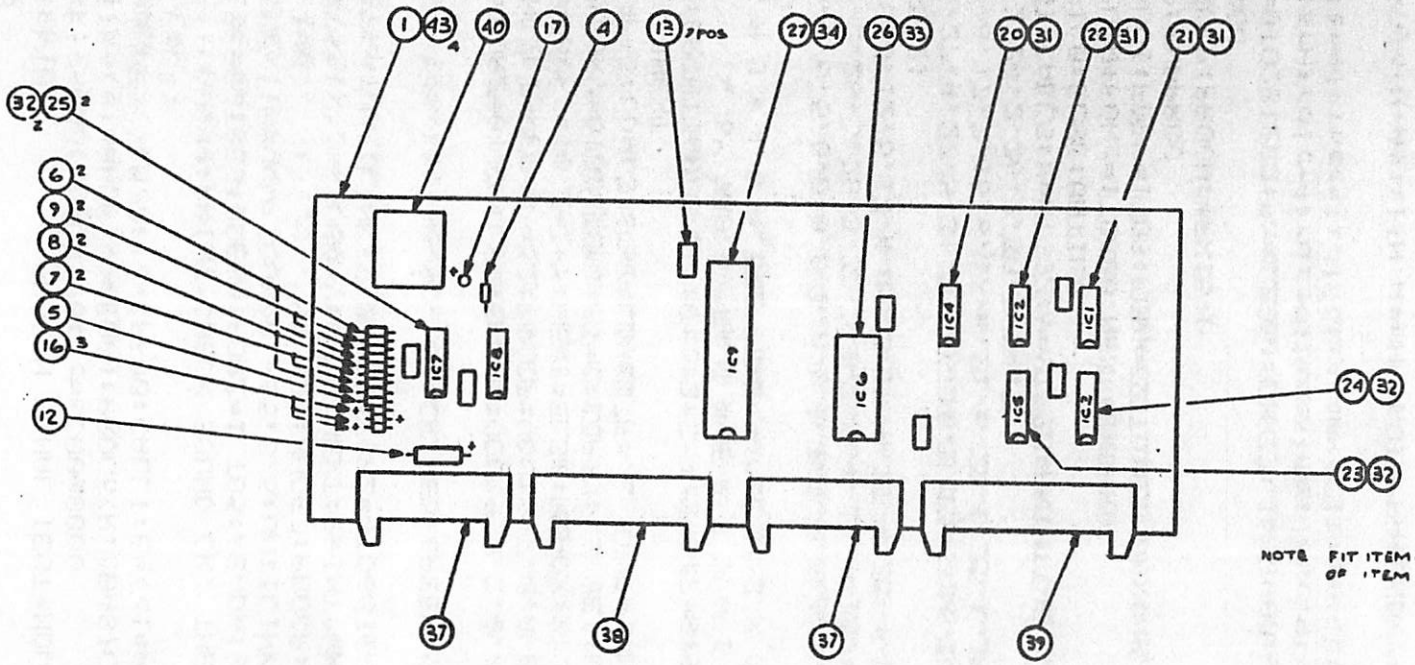

NOTE FIT ITEM 4B ON NON COMPONENT SIDE OF ITEM 1 IN CORNERS

ISSUE A	INITIAL ISSUE	TOLERANCE	TITLE ASSEMBLY DRAWING FOR FINAL TEST JIG CARD	©COPYRIGHT 1982 ACORN COMPUTERS Ltd FULBOURN ROAD CHERRY HINTON CAMBRIDGE CB1 4JN	
DATE 2-82		FINISH			
DRAWN RA		MATERIAL	DRG. No. 103,008/A	ACORN COMPUTERS Ltd	

29. FIT CASSETTE PROGRAM LISTING

```
 5*TV255
 10MODE7:PRINT"        PROTON FINAL TEST-MODEL A"''
 20F=&FFFF:c=&80:GOSUB170:!c=&C0008000
 30:CALLI:R=(c!4ANDF)<>&EB04:PROCn(R,"BASIC ROM CRC"):!c=&FC00C000:C
ALLI:D=(c!4ANDF)<>&577:!c=&FF00:CALLI:E=(c!4ANDF)<>&9E7E:R=D ORE:PROCn
(R,"OS ROM CRC")
 31PRINT'':VDU&84:PRINT"CHECK SOUND OK, THEN PRESS SPACE"
 40PROCP:REPEATRESTORE60:FORZ=1 TO5:READA:SOUND(Z MOD3+1),-15,A,11:P
ROCW:PROCW:NEXT:PROCW:SOUND0,-15,5,5:UNTILINKEY(30)=32
 50DIM C 100 , XT 122 , YT 122:MODE7:PROCP:FORX=&7C00TO&8000STEP40:F
ORY=0TO7:Z=Y*5:X!Z=&9D00+Y:NEXT:NEXT:PRINT"WHITE RED GREEN YELO BLUE M
AG CYAN":REPEATUNTILINKEY(0)=32:FORZ=4TO6STEP2:MODEZ:PRINT"MODE"Z:PROC
I:NEXT
 60DATA120,128,111,80,92, BLACK,RED,GREEN,YELLOW,BLUE,MAGENTA,CYAN,W
HITE
 70MODE5:FORZ=0TO7:CLS:READA$:VDU19,0,Z,0,0,0:PRINT"  "A$" BACKGROUN
D":REPEATUNTILINKEY(0)=32:PROCP:VDU19,7,0,0,0,0:NEXT:FORZ=0TO121
 80IF(Z AND&F)=10 Z=Z+5:NEXT:ELSE:READX:XT?Z=X:READY:YT?Z=Y:NEXT:Z=&
80:P=&FE40:FORV=0TO2STEP2:P%=C:[OPTV:.S SEI:LDA£0:STAZ:LDA£&FF:STAP+2:
LDA£&7F:STAP+3:LDA£3:STAP:LDY£&7F:.L STYP+1:LDAP+1:BMIG:DEY:BPLL:JMPS:
.G STYZ:RTS:]NEXT
 90MODE6:PRINTTAB(8,2)"f0f1f2f3f4f5f6f7f8f9BR"'TAB(4)"ES1 2 3 4 5 6
7 8 9 0 - ^ \ a b"'TAB(4)"TA Q W E R T Y U I O P @ [ _ c d"'TAB(4)"CL(
TA S D F G H J K L ; : ]RE"'TAB(4)"SLSH Z X C V B N M , . /SHDECU"'TAB
(17)"SP"
 100DATA6,6,6,5,0,0,0,0,0,0,0,0,0,0,0,0,0,0,0,0,0,7,4,10,3,12,3,14,3,16
,2,20,3,22,2,26,3,28,3,32,3,8,2,9,4,11,4,15,4,18,3,21,4,22,3,24,3,31,4
,35,4,6,3,8,3,12,5,13,4,16,3,19,4,23,4,25,4,29,4,33,4,4,5,8,5,11,6,14,
5,17,4,19,5,21
 110DATA5,27,4,27,5,31,5,4,6,10,5,13,6,16,5,18,5,19,6,23,5,25,5,29,5,
30,6,4,4,9,6,17,7,15,6,17,6,21,6,23,6,25,6,26,6,32,6,4,3,10,2,12,2,14,
2,18,2,20,2,24,2,26,2,30,3,34,3
 120REPEAT:CALLS:X=XT??Z:Y=YT??Z:PRINTTAB(X,Y)"  ":IF?Z=0PRINTTAB(28,
6)"  ":UNTIL0:ELSE:UNTIL0
 130DEFPROCW:FORs=1TO600:NEXT:ENDPROC
 140DEFPROCI:FORY=1TO9:FORX=32TO102:VDUX:NEXT:NEXT:REPEATUNTILINKEY(0
)=32:PROCP:ENDPROC
 150DEFPROCP:PROCW:*FX15,0
 160ENDPROC
 170FORZ=0TO2STEP2:P%=&2E00:[OPTZ:.I:ldy£0:styc+5:styc+4:.e:lda(c),Y:
ldx£8:.b:lsrA:rolc+4:rolc+5:bcca:pha:ldac+4:eor£&2D:stac+4:pla:.a:dex:
bneb:incc:bned:incc+1:.d:ldac:cmpc+2:bnee:ldac+1:cmpc+3:bnee:rts:]:NEX
T:RETURN
 180DEFPROCn(N,A$):IFN A$=CHR$&81+"FAILED "+A$ELSEA$=CHR$&82+"PASSED
"+A$
 190PRINTA$:R=0:ENDPROC
>
```

```
 5*TU255
 30f=&FFFF:MODE7:PRINT"     PROTON FINAL TEST-MODEL B"'':c=&80:GOSUB2
90:P=&FE60:T=&FC00:!c=&FE00FC05:CALLCRC:R=(c!4ANDf)<>&B0BA:PROCn(R,"1M
Hz EXTENSION BUS"):P?3=&FF:FORZ=0TO7:A=2^Z:P?1=A:PROCDEL(50):R=(?T<>A)
ORR:NEXT
 50PROCn(R,"PRINTER LINES"):T?3=&BB:P?12=&09:P?2=&FF:T?3=&9B:FORZ=0T
07:A=2^Z:?P=A:PROCDEL(50):E=T?1<>A:R=E ORR:NEXT:PROCn(R,"USER I/O OUTP
UT"):P?2=0:T?3=&99:FORZ=0TO7:A=2^Z:T?1=A:PROCDEL(50):E=?P<>A:R=E ORR:N
EXT:PROCn(R,"USER I/O INPUT")
 600=ADVAL(2):R=ABS(Q-11680)>1000
 70P?12=0:P?3=&FF:FORV=0TO3:P?1=V:FORZ=0TO500:NEXT:D=V+1:FORZ=D TO(D
+3):R%=Z MOD4+1:I=ADVAL(R%)/(Z-V):E=ABS(Q-I)>300:R=E ORR:NEXT:NEXT:PRO
Cn(R,"A/D CHANNELS")
 80M=&FE08:?&FE10=&64:FORZ=0 TO5:A=M?1:NEXT:?M=3:?M=&1E:R=0
 90FORW=0TO7:X=2^W:Y=0:REPEATY=Y+1:UNTIL(?M AND2)=20RY>100:IFY>100R=
R+1:GOTO130
 100M?1=X:Y=0:REPEATY=Y+1:UNTIL(?M AND1)=1ORY>100:IFY>100R=R+1:GOTO13
0
 110Z=M?1:IFZ<>X R=R+1
 120NEXT
 130PROCn(R,"RS423")
 140!c=&C0008000:CALLCRC:R=(c!4ANDf)<>&EB04:PROCn(R,"BASIC ROM CRC"):
!c=&FC00C000:CALLCRC:D=(c!4ANDf)<>&577:!c=&FF00:CALLCRC:E=(c!4ANDf)<>&
9E7E:R=D ORE:PROCn(R,"OS ROM CRC")
 150PRINT'':VDU&84:PRINT"CHECK SOUND OK, THEN PRESS SPACE":PROCP
 160REPEATRESTORE180:FORZ=1TO5:READA:SOUND(Z MOD3+1),-15,A,11:PROCW:P
ROCW:NEXT:PROCW:SOUND0,-15,5,5:UNTILINKEY(30)=32
 170DIM C 100 , XT 122 , YT 122:MODE7:CLS:FORX=&7C00TO&8000STEP40:FOR
Y=0TO7:Z=Y*5:X!Z=&9D00+Y:NEXT:NEXT:PRINT"WHITE RED GREEN YELO BLUE MAG
 CYAN":PROCP:REPEATUNTILINKEY(0)=32:FORZ=0TO3:MODEZ:PRINT'"MODE"Z:PROC
I:NEXT
 180DATA120,128,111,63,92, BLACK,RED,GREEN,YELLOW,BLUE,MAGENTA,CYAN,W
HITE
 190FORZ=4TO6STEP2:MODEZ:PRINT"MODE"Z:PROCI:NEXT:MODE5:FORZ=0TO7:CLS:
READA$:VDU19,0,Z,0,0,0:PRINT"  "A$" BACKGROUND":REPEATUNTILINKEY(0)=32
:PROCP:VDU19,7,0,0,0,0:NEXT:RESTORE220:FORZ=0TO121
 200IF(Z AND&F)=10 Z=Z+5:NEXT:ELSE:READX:XT?Z=X:READY:YT?Z=Y:NEXT:Z=&
80:P=&FE40:FORY=0TO2STEP2:P%=C:[OPTY:.S SEI:LDA£0:STAZ:LDA£&FF:STAP+2:
LDA£&7F:STAP+3:LDA£3:STAP:LDY£&7F:.L STYP+1:LDAP+1:BMIG:DEY:BPLL:JMPS:
.G STYZ:RTS:]NEXT
 210MODE6:PRINTTAB(8,2)"f0f1f2f3f4f5f6f7f8f9BR"'TAB(4)"ES1 2 3 4 5 6
7 8 9 0 - ^ \ a b"'TAB(4)"TA Q W E R T Y U I O P @ [ _ c d"'TAB(4)"CLC
TA S D F G H J K L ; : ]RE"'TAB(4)"SLSH Z X C V B N M , . /SHDECO"'TAB
(17)"SP"
 220DATA6,6,6,5,0,0,0,0,0,0,0,0,0,0,0,0,0,0,0,0,0,0,7,4,10,3,12,3,14,3,16
,2,20,3,22,2,26,3,28,3,32,3,8,2,9,4,11,4,15,4,18,3,21,4,22,3,24,3,31,4
5,17,4,19,5,21
 230DATA5,27,4,27,5,31,5,4,6,10,5,13,6,16,5,18,5,19,6,23,5,25,5,29,5,
30,6,4,4,9,6,17,7,15,6,17,6,21,6,23,6,25,6,26,6,32,6,4,3,10,2,12,2,14,
2,18,2,20,2,24,2,26,2,30,3,34,3
 240REPEAT:CALLS:X=XT??Z:Y=YT??Z:PRINTTAB(X,Y)"  ":IF?Z=0PRINTTAB(28,
6)"  ":UNTIL0:ELSE:UNTIL0
 250DEFPROCW:FORz=0 TO 600:NEXT:ENDPROC
 260DEFPROCI:FORY=1TO9:FORX=32TO102:VDUX:NEXT:NEXT:PROCP:REPEATUNTILI
NKEY(0)=32:ENDPROC
 270DEFPROCP:PROCW:*FX15,0
 280ENDPROC
 290FORZ=0TO2STEP2:P%=&2E00:[OPTZ:.CRC:ldy£&00:styc+5:styc+4:.e:lda(c
),Y:ldx£&08:.b:lsrA:rolc+4:rolc+5:bcca:pha:ldac+4:eor£&2D:stac+4:pla:.
a:dex:bneb:incc:bned:incc+1:.d:ldac:cmpc+2:bnee:ldac+1:cmpc+3:bnee:rts
:]:NEXT:RETURN
 300DEFPROCn(N,A$):IFN A$=CHR$&81+"FAILED "+A$ELSEA$=CHR$&82+"PASSED
"+A$
 310PRINTA$:R=0:ENDPROC
 320DEFPROCDEL(DEL):FORDELA=0TODEL:NEXT:ENDPROC
```